035539CY

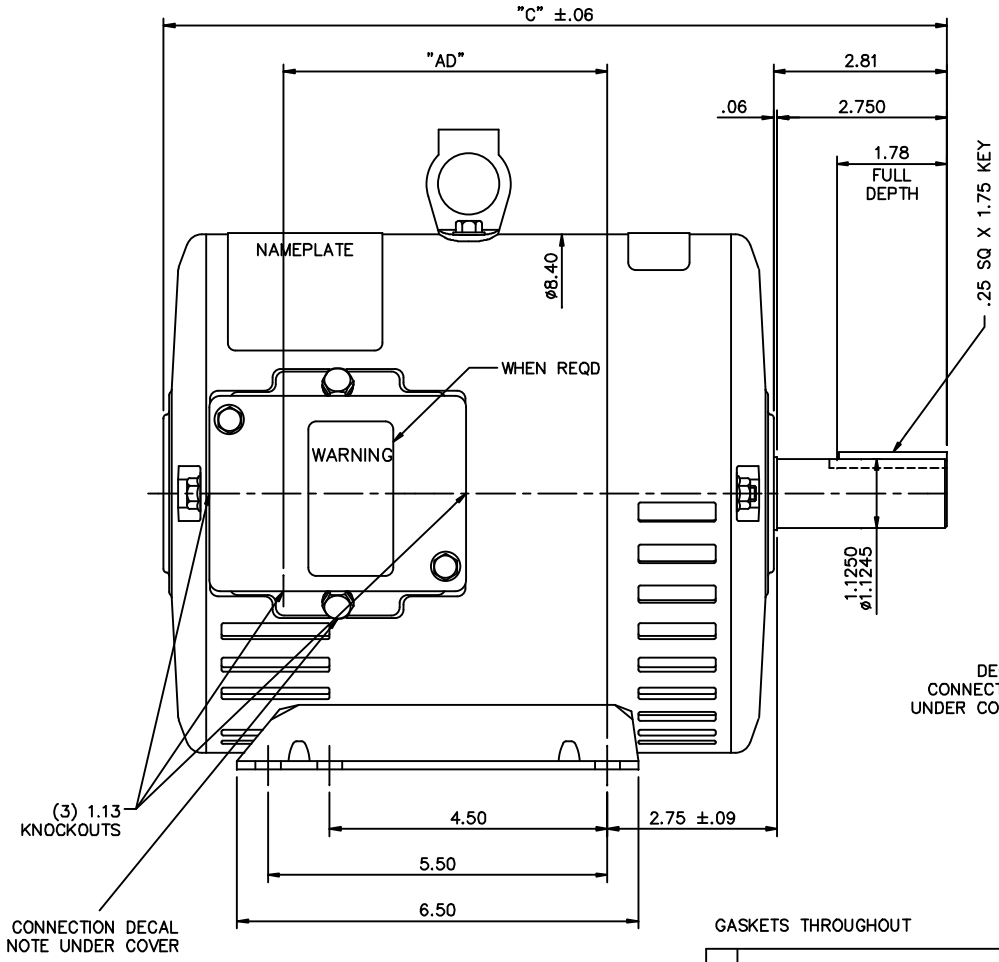

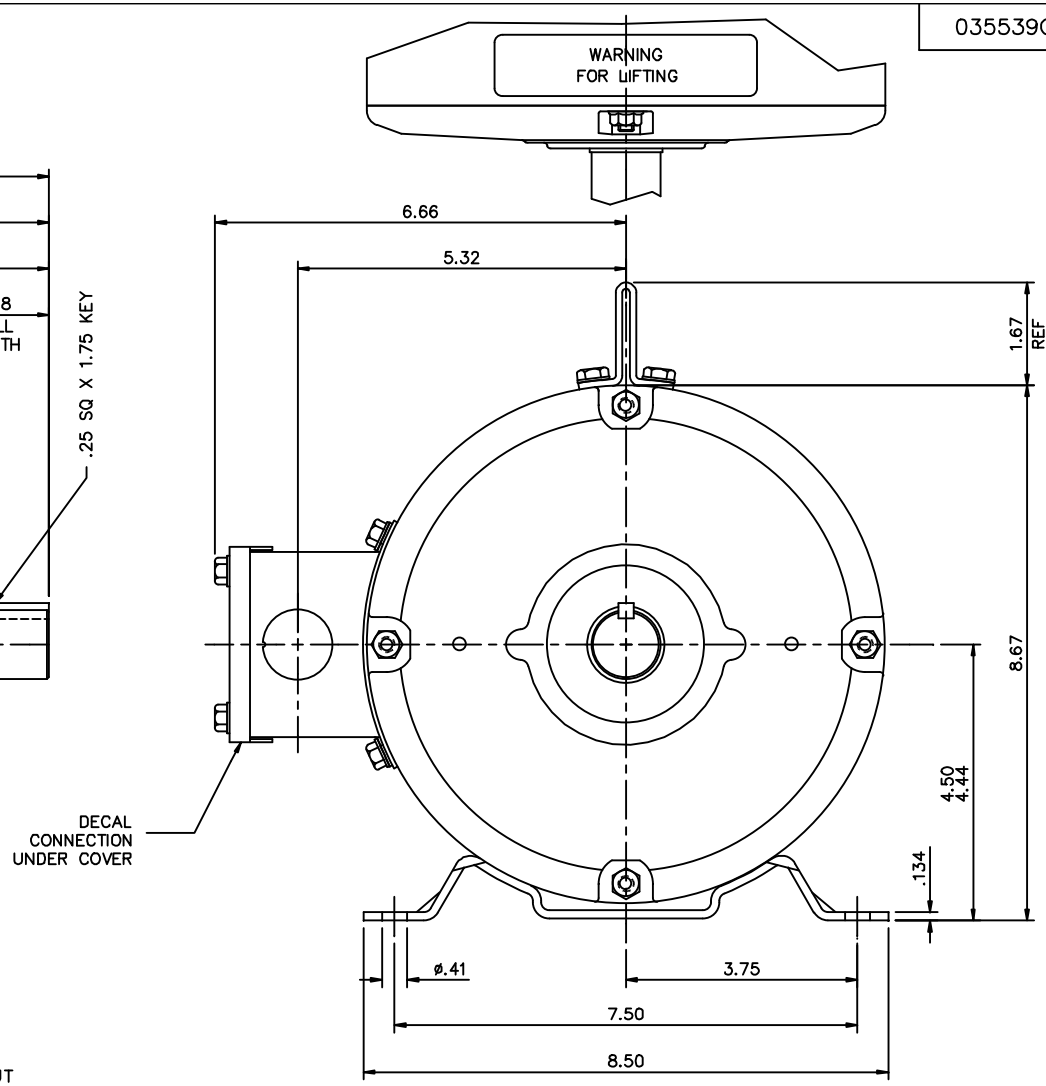

GASKETS THROUGHOUT

DASH NO.	"C"	"AD"
850	12.69	5.25
900	13.19	5.75
950	13.69	6.25
1000	14.19	6.75
1050	14.69	7.25
1100	15.19	7.75
1150	15.69	8.25

NO.	REVISION	BY & DATE	CHK
1	ADDED DECAL CONNECTION NOTE.	GR 06/18/12	ST

TOLERANCES UNLESS SPECIFIED

DEC.	INCHES
.X	±.1
.XX	±.03
.XXX	±.005
.XXXX	±.0005
ANG	±1/2°

Century

TITLE: OUTLINE – 180T FRAME DRIP PROOF – RIGID

MAT'L.: GENERAL PURPOSE

FINISH

CAD FILE: 035539CY

RFP

DIST: NLV

DRAWN	GR 03/27/12
CHK	ST 03/27/12
APPD	
SCALE	1=2
REF	035539
FMF	
PREV	

SIZE: B | DRAWING NO.: 035539CY | REV.: 1