612–0083

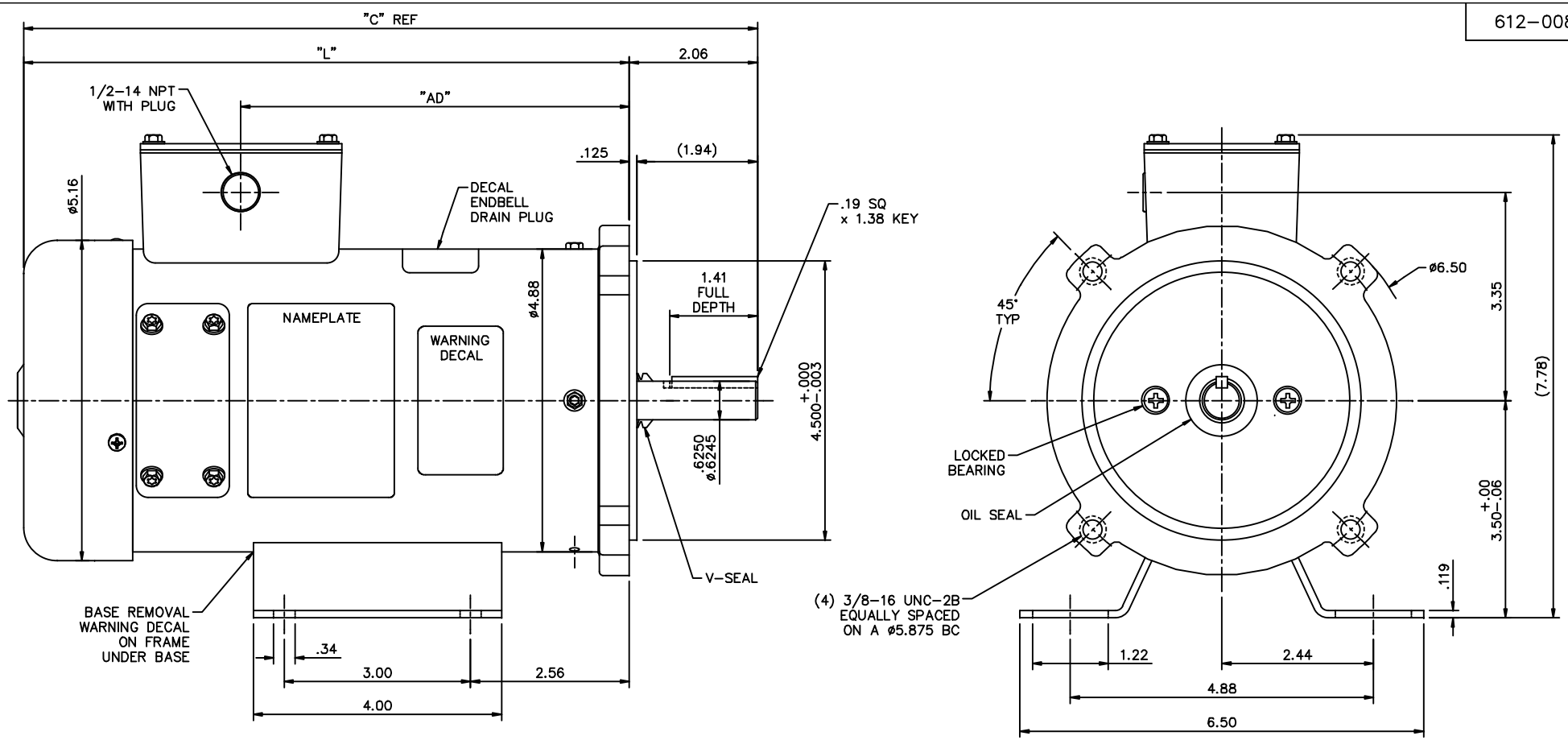

CATALOG No.	"C"	"L"	"AD"	VOLTS	HP	RPM
DC153	13.81	11.75	8.25	180	3/4	1750
DC151	11.81	9.75	6.25	180	1/2	1750
DC152	13.81	11.75	8.25	90	3/4	1750
DC150	11.81	9.75	6.25	90	1/2	1750
DC149	11.31	9.25	5.75	90	1/3	1750
DC148	10.81	8.75	5.25	90	1/4	1750

NOTES:
1) MAXIMUM FACE RUNOUT .004 T.I.R.
2) MAXIMUM PILOT ECCENTRICITY .004 T.I.R.
3) PERMISSIBLE SHAFT RUNOUT .002 T.I.R.
4) GASKETS THROUGHOUT.
5) DRAIN HOLES PLUGGED AT 3, 9 AND 12 O'CLOCK. HOLES AT 6 O'CLOCK ARE OPEN (BOTH ENDS)

NO.	REVISION	BY & DATE
01	FIXED NAMEPLATE VIEW, RELEASED TO PRODUCTION	IPG 9/21/12
00	REF 027911 & 027620	SAD 8/21/2012

TOLERANCES UNLESS SPECIFIED

DEC.	INCHES
.X	±.1
.XX	±.03
.XXX	±.005
.XXXX	±.0005
ANG	±1/2°

CHK

Century

TITLE: OUTLINE 42 FRAME DC

MAT'L.

FINISH

DRAWN SAD 8/21/2012
CHK
APPD
SCALE 5=8
REF 027911
FMF
PREV

RFP
DIST
CAD FILE 612–0083
SIZE B
DRAWING NO. 612–0083
REV. 01