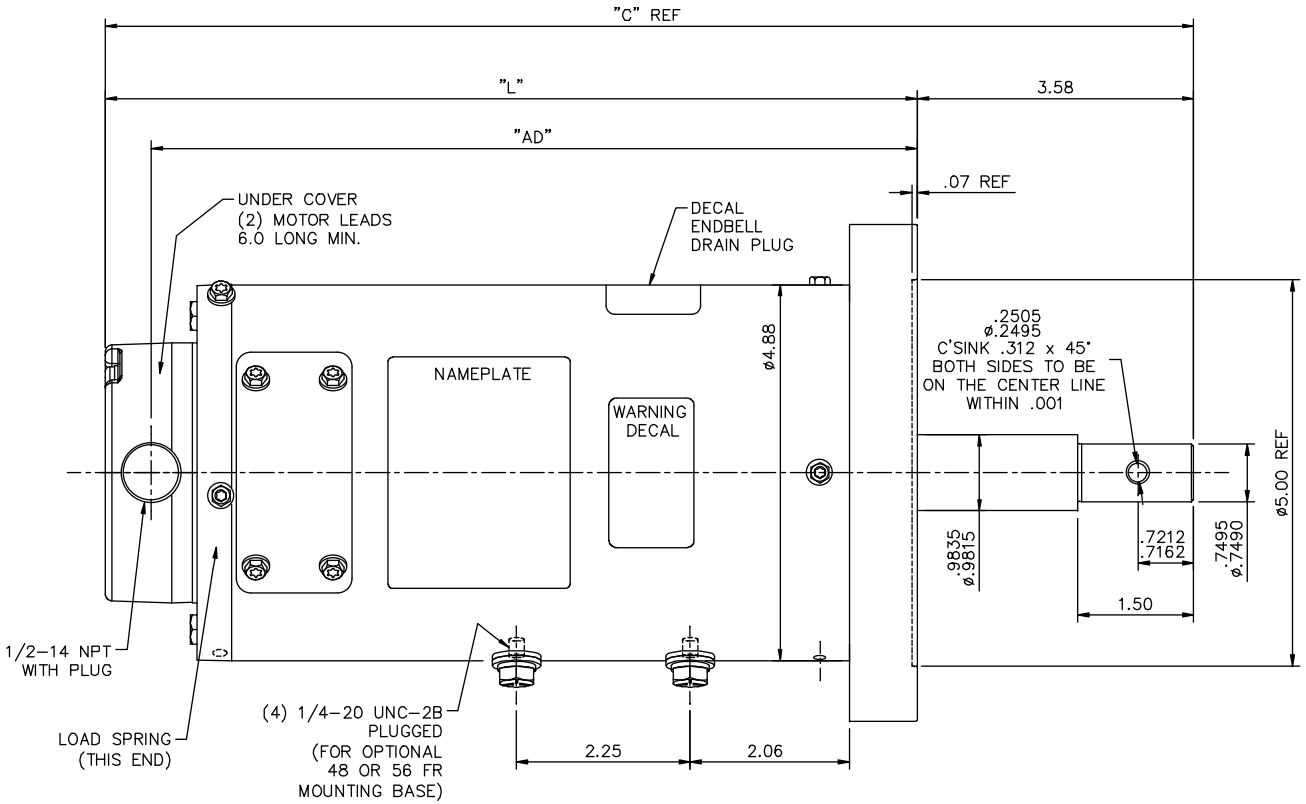


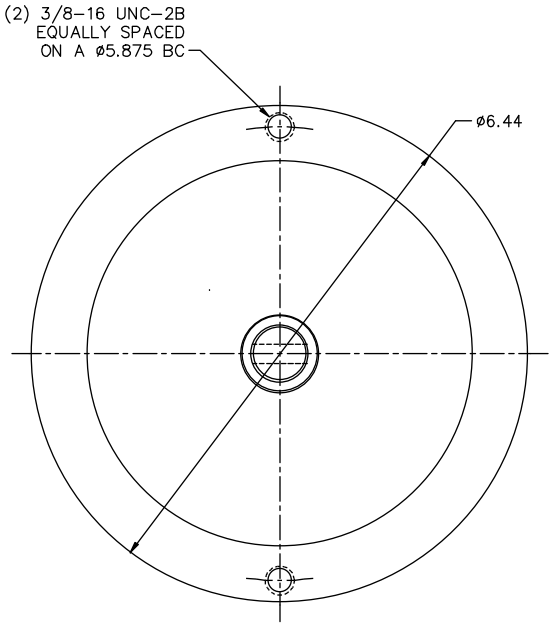


| CATALOG No. | "C" | "L" | "AD" | VOLTS | HP | RPM |
|---|---|---|---|---|---|---|
| DC147 | 15.60 | 12.02 | 11.42 | 95 | 1 | 950 |
| DC146 | 14.10 | 10.52 | 9.92 | 95 | 1/2 | 950 |

NOTES:
1) MAXIMUM FACE RUNOUT .004 T.I.R.
2) PERMISSIBLE SHAFT RUNOUT .004 T.I.R.
3) GASKETS THROUGHOUT.
4) DRAIN HOLES PLUGGED AT 3, 9 AND 12 O'CLOCK.
HOLES AT 6 O'CLOCK ARE OPEN (BOTH ENDS)

| NO. | REVISION | BY & DATE |
|---|---|---|
| 01 | 2.06 DIM WAS 2.18; OVERALL MOTOR LENGTH REDUCED BY .05"; RELEASED TO PRODUCTION | IPG 1/15/13 |
| 00 | RELEASED: REF. 027878, 027921 & 46NN47 | IPG 8/29/12 |

| TOLERANCES UNLESS SPECIFIED | |
|---|---|
| DEC. | INCHES |
| .X | ±.1 |
| .XX | ±.03 |
| .XXX | ±.005 |
| .XXXX | ±.0005 |
| ANG | ±1/2° |

CHK

Century

TITLE: OUTLINE 42 FRAME DC

MAT'L.

FINISH

CAD FILE 612–0085

RFP

DIST

DRAWN IPG 8/29/12
CHK
APPD
SCALE 5=8
REF 027878
FMF DC146(D201)
PREV

SIZE B | DRAWING NO. 612–0085 | REV. 01