REV	ECO	REV BY	DATE	APPD	DATE
T	ECO-0018824	J.HESS	04-15-2011	J.HESS	04-15-2011

FOR SINGLE SPEED ONLY
COLOR OF LEADS TO BE OPTIONAL

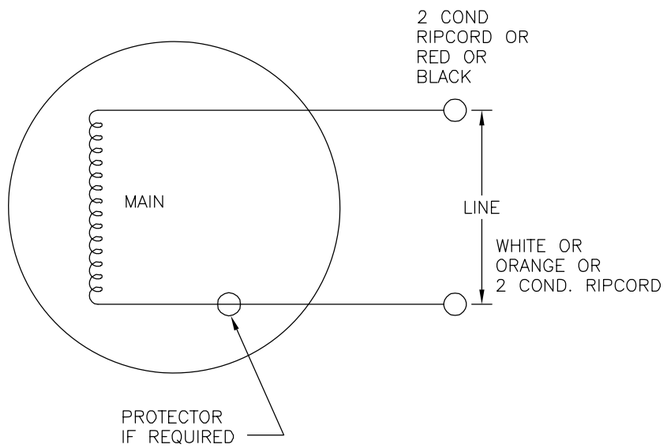

SINGLE SPEED
FIG.1

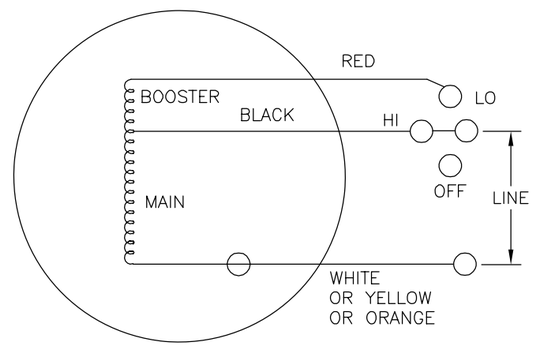

2 SPEED
FIG.2

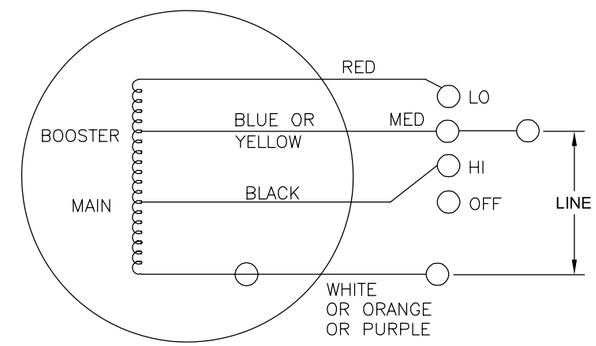

3 SPEED
FIG.3

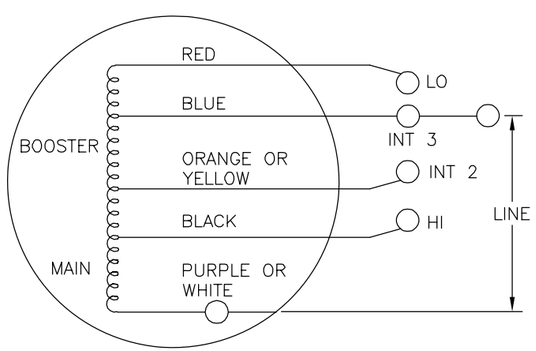

4 SPEED
FIG.4

QUALIITY CONTROL NOTE:
TO CHECK THE WINDINGS FOR OPENS VERIFY THE
CONTINUITY AS OUTLINED BELLOW.
FIG.1 BETWEEN WHITE AND BLACK OR WHITE & RED LEADS
FIG.2, 3 & 4, BETWEEN THE WHITE & RED LEADS.

GEOMETRIC CHARACTERISTICS & SYMBOLS
- FLATNESS
- STRAIGHTNESS
- ANGULARITY
- PERPENDICULARITY (SQUARENESS)
- PARALLELISM
- ROUNDNESS (CIRCULARITY)
- CYLINDRICITY
- PROFILE OF ANY SURFACE
- PROFILE OF ANY LINE
- RUNOUT
- TRUE POSITION
- CONCENTRICITY
- SYMMETRY

UNLESS OTHERWISE SPECIFIED
DIM. TOLERANCES ARE AS FOLLOWS:

	X	XX	XXX	XXXX
INCH	±.1	±.02	±.005	±.0005
mm	±0.5	±0.13	±0.013	

ANG. ±.50 DEG
REMOVE BURRS & BREAK SHARP EDGES:
INCH .003-.015 mm 0.1-0.4
CORNER FILLETS TO:
INCH .020 mm 0.5
MACHINE SURFACES:
INCH 125 mm 3.2
METRIC DIMS. SHOWN IN [BRACKETS]

DR BY: KLINE 10-24-1966
APPD: RDS 10-27-1966
THIRD ANGLE PROJECTION
EDS DATE 02-22-2008
FORMAT REV F

ASME Y14.5M 1994

AO Smith Innovation has a name.
ELECTRICAL PRODUCTS COMPANY
A DIVISION OF A. O. SMITH CORPORATION

DESCRIPTION: CONN DIAGRAM-EXTERNAL
SIZE: C
DWG NO: 261B865F01
SCALE: NONE
SHEET: 1

REVISION:	ECO	REVISADO POR:	FECHA:	APROBADO POR:	FECHA:
T	ECO-0018824	J.HESS	04-15-2011	J.HESS	04-15-2011

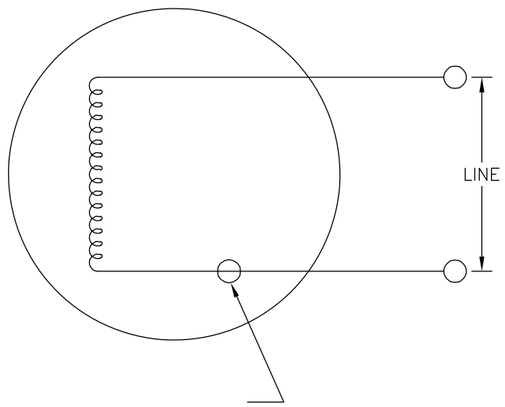

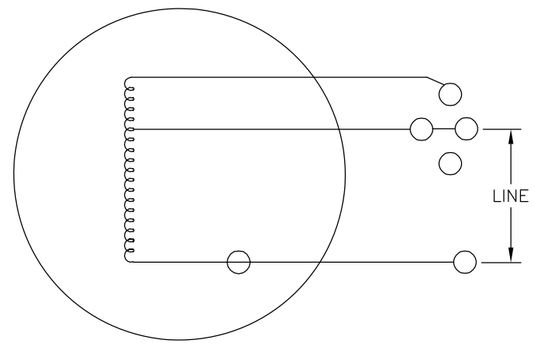

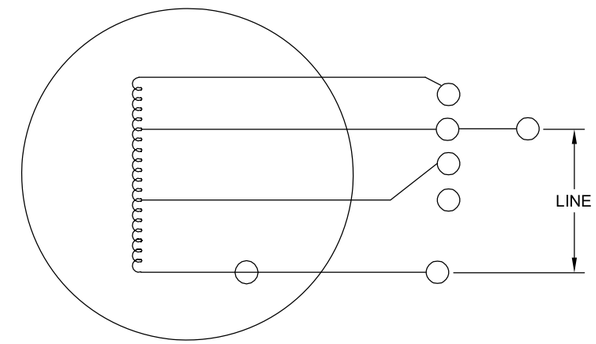

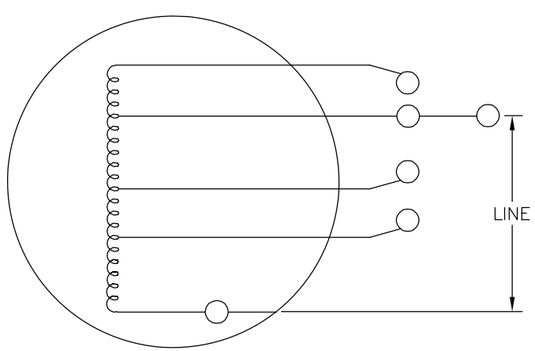

CARACTERISTICAS DE GEOMETRIA Y SIMBOLOS
- PLANICIDAD
- RECTITUD
- ANGULARIDAD
- PERPENDICULARIDAD (A ESCUADRA)
- PARALELISMO
- REDONDEZ (CIRCULARIDAD)
- CILINDRICIDAD
- PERFIL DE CUALQUIER SUPERFICIE
- PERFIL DE CUALQUIER LINEA
- VARIACION
- POSICION REAL
- CONCENTRICIDAD
- SIMETRIA

A MENOS QUE SE ESPECIFIQUE DE OTRA MANERA, LAS TOLERANCIAS DE LAS DIMS; SON LAS SIGUIENTES:

	X	XX	XXX	XXXX
PULG	±.1	±.02	±.005	±.0005
mm	±0.5	±0.13	±0.013	

ANG. ±.50 GRADOS
ELIMINAR REBABAS Y ORILLAS FILOSAS DEL BORDE.
PULG .003-.015 mm 0.1-0.4
FILETEAR ESQUINA: PULG .020 mm 0.5
MAQUINAR SUPERFICIES
PULG 125 mm 3.2
DIMS METRICAS MOSTRADAS [PARENTESIS]

DIBUJADO POR: KLINE	10-24-1966
APROBADO POR: RDS	10-27-1966
TERCER ANGULO DE PROYECCION	FECHA EDS: 02-22-2008
	REV. FORMATO: F

ASME Y14.5M 1994

A.O.Smith Innovation has a name.
ELECTRICAL PRODUCTS COMPANY
A DIVISION OF A. O. SMITH CORPORATION

DESCRIPCION: CONN DIAGRAM-EXTERNAL

TAMAÑO: C
NUMERO DE DIBUJO: 261B865F01
ESCALA: NONE
HOJA: 1

版本	ECO	编制	日期	批准	日期
T	ECO-0018824	J.HESS	04-15-2011	J.HESS	04-15-2011

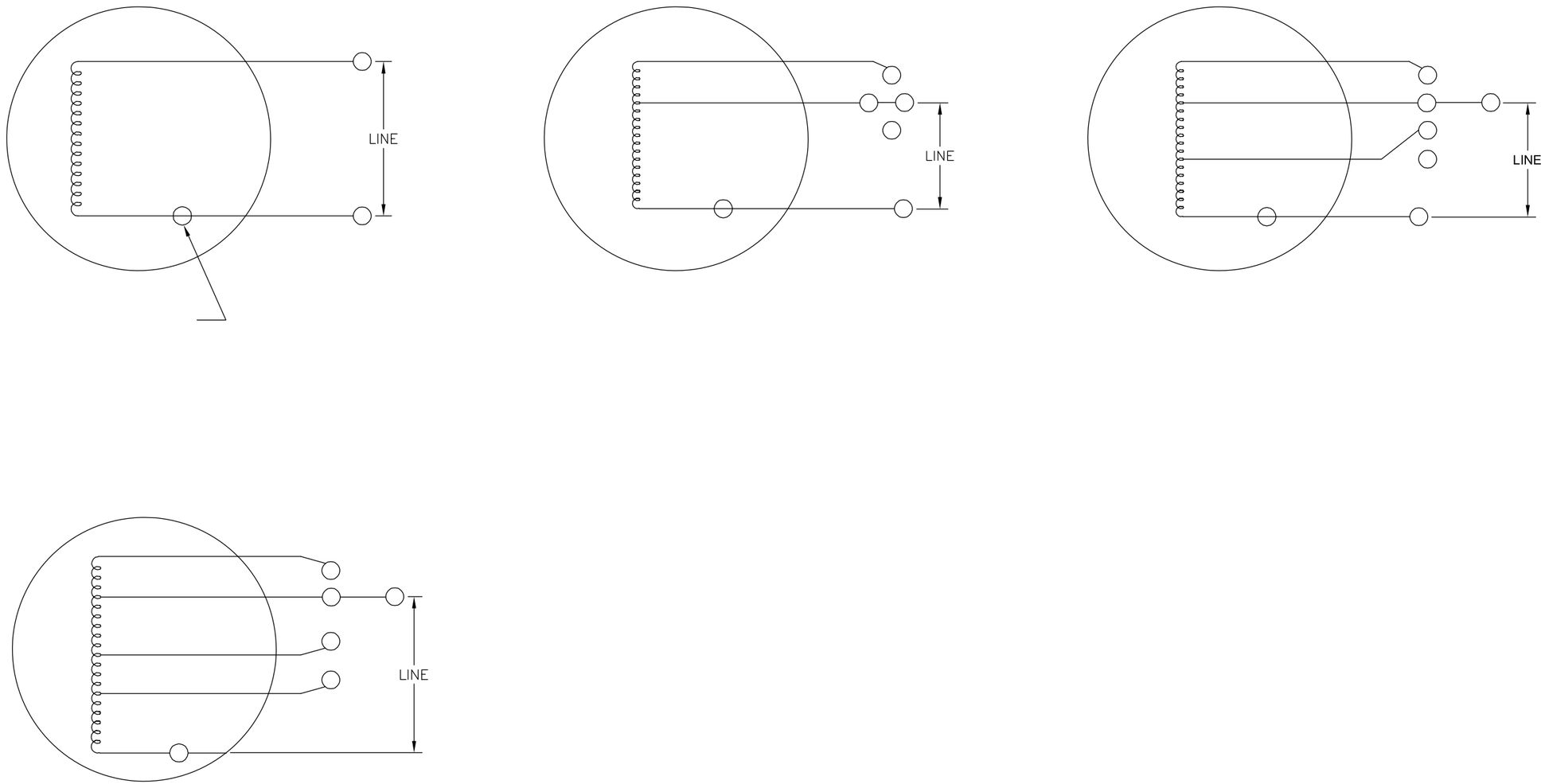

形位公差
- 平面度
- 直线度
- 倾斜度
- 垂直度
- 平行度
- 圆度
- 圆柱度
- 面轮廓度
- 线轮廓度
- 圆跳动
- 位置度
- 同轴度
- 对称度

除另有注明
尺寸公差如下：

	X	XX	XXX	XXXX
英寸	±.1	±.02	±.005	±.0005
毫米	±0.5	±0.13	±0.013	

角度 ±.50 度
清理毛刺和尖棱
英寸 .003-.015 毫米 0.1-0.4
内圆角
英寸 .020 毫米 0.5
表面粗糙度
英制 125 米制 3.2
米制尺寸显示在[ ]

绘图: KLINE	10-24-1966	
批准: RDS	10-27-1966	
第三角投影	图纸格式发布日期 02-22-2008	
	图纸格式版本 F	

ASME Y14.5M 1994

AO Smith Innovation has a name.
ELECTRICAL PRODUCTS COMPANY
A DIVISION OF A. O. SMITH CORPORATION

名称 CONN DIAGRAM-EXTERNAL

图幅	图号	
C	261B865F01	
比例 NONE		页号 1