Uncontrolled Copy

REV	ECO	REV BY	DATE	APPD	DATE
P	0027378	H.REN	07-13-2012	B.SHEN	07-13-2012

CUSTOMER IS SOLELY RESPONSIBLE FOR MOTOR PERFORMANCE AND SUITABILITY IN APPLICATIONS FOR CUSTOMER'S USES

END PLAY .04 MAX.

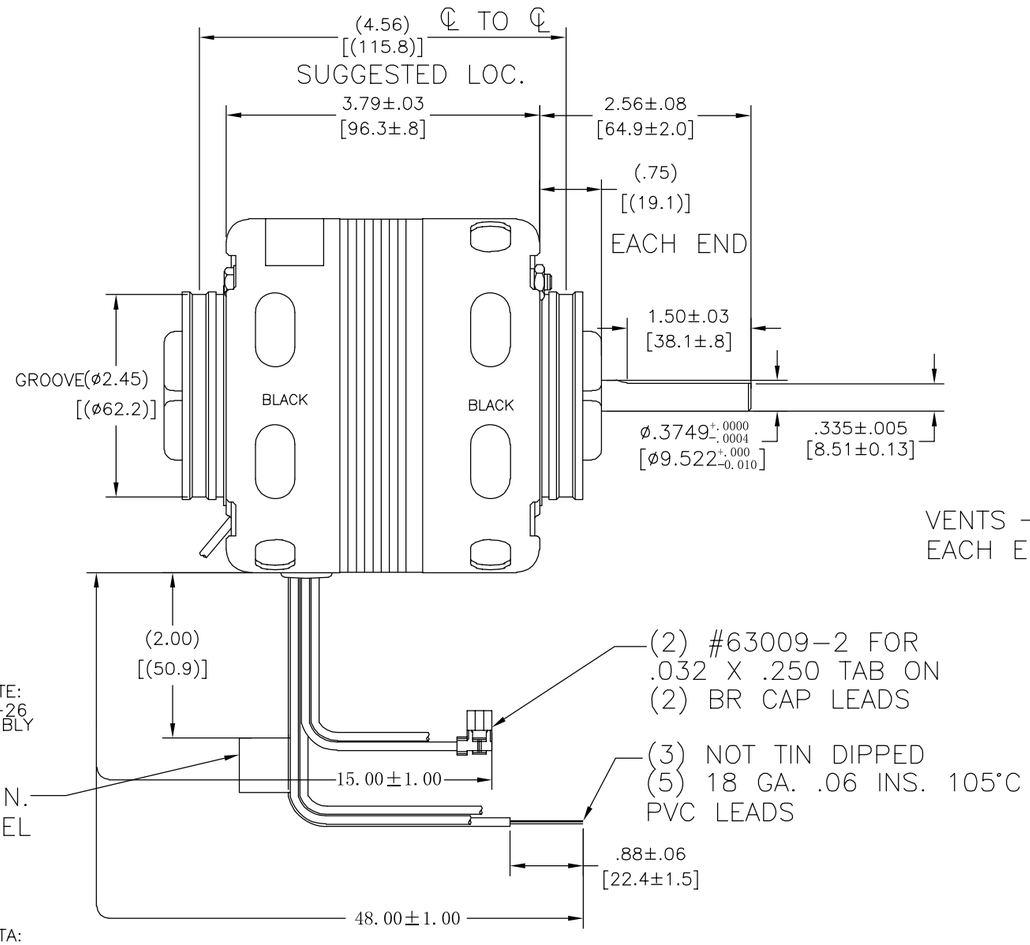

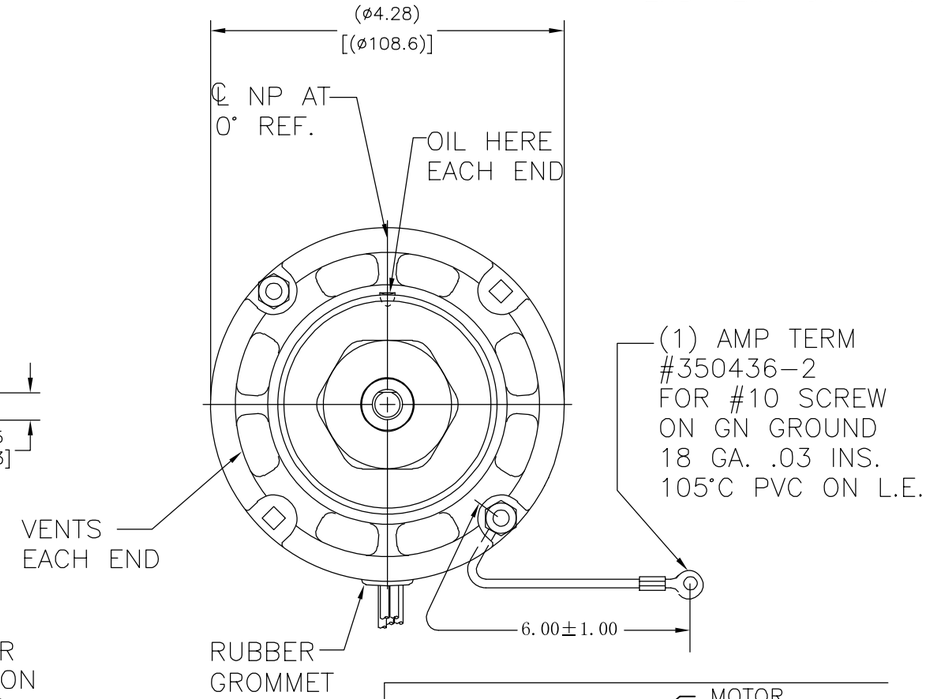

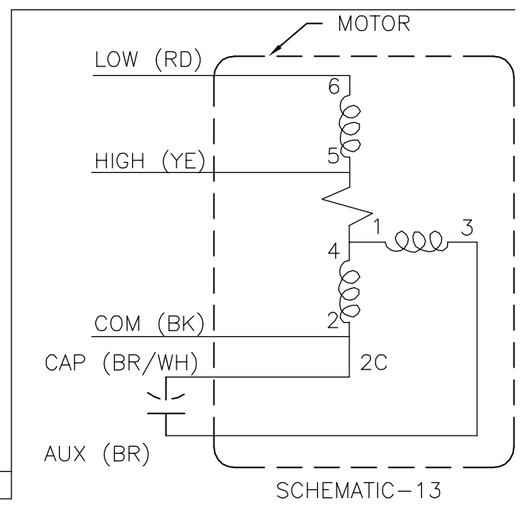

SCHEMATIC-13

NAMEPLATE DATA:

Century®

THERMALLY PROTECTED

Tipp City, OH

SER. DAT PO,PLT MOD CE3G018N

208-230V 60HZ .8/.5A 1050/875RPM 1/12HP

AO CONT CWSE USE 4MFD 370VAC CAPACITOR

STOCK NO. 9485

CONN. LABEL
63T473-141

ELECTRICALLY PER
SAMPLE S-3862E

CCWLE-CWSE | BOM CHG [M]

GEOMETRIC CHARACTERISTICS & SYMBOLS
- FLATNESS
- STRAIGHTNESS
- ANGULARITY
- PERPENDICULARITY (SQUARENESS)
- PARALLELISM
- ROUNDNESS (CIRCULARITY)
- CYLINDRICITY
- PROFILE OF ANY SURFACE
- PROFILE OF ANY LINE
- RUNOUT
- TRUE POSITION
- CONCENTRICITY
- SYMMETRY

ASME Y14.5M 1994

UNLESS OTHERWISE SPECIFIED
DIM. TOLERANCES ARE AS FOLLOWS:

	X	XX	XXX	XXXX
INCH	±.1	±.02	±.005	±.0005
mm	±0.5	±0.13	±0.013	

ANG. ±.50 DEG
REMOVE BURRS & BREAK SHARP EDGES:
INCH .003-.015 mm 0.1-0.4
CORNER FILLETS TO:
INCH .020 mm 0.5
MACHINE SURFACES:
INCH 125 mm 3.2

METRIC DIMS. SHOWN IN [BRACKETS]

DR BY: .
APPD: .
THIRD ANGLE PROJECTION
EDS DATE 11-11-2011
FORMAT REV H

CONFIDENTIAL: THIS DRAWING AND ITS INFORMATION ARE THE EXCLUSIVE AND CONFIDENTIAL PROPERTY OF REGAL-BELOIT CORPORATION AND ARE NOT TO BE DISCLOSED, DUPLICATED, DISTRIBUTED OR OTHERWISE USED WITHOUT THE WRITTEN CONSENT OF REGAL-BELOIT CORPORATION. -ALL RIGHTS RESERVED.

REGAL **REGAL-BELOIT CORPORATION**

DESCRIPTION: OUTLINE

SIZE C | DWG NO CE3G018

SCALE NONE | SHEET 1

Uncontrolled Copy

REVISION:	ECO	REVISADO POR:	FECHA:	APROBADO POR:	FECHA:
P	0027378	H.REN	07-13-2012	B.SHEN	07-13-2012

CUSTOMER IS SOLELY RESPONSIBLE FOR MOTOR PERFORMANCE AND SUITABILITY IN APPLICATIONS FOR CUSTOMER'S USES

END PLAY .04 MAX.

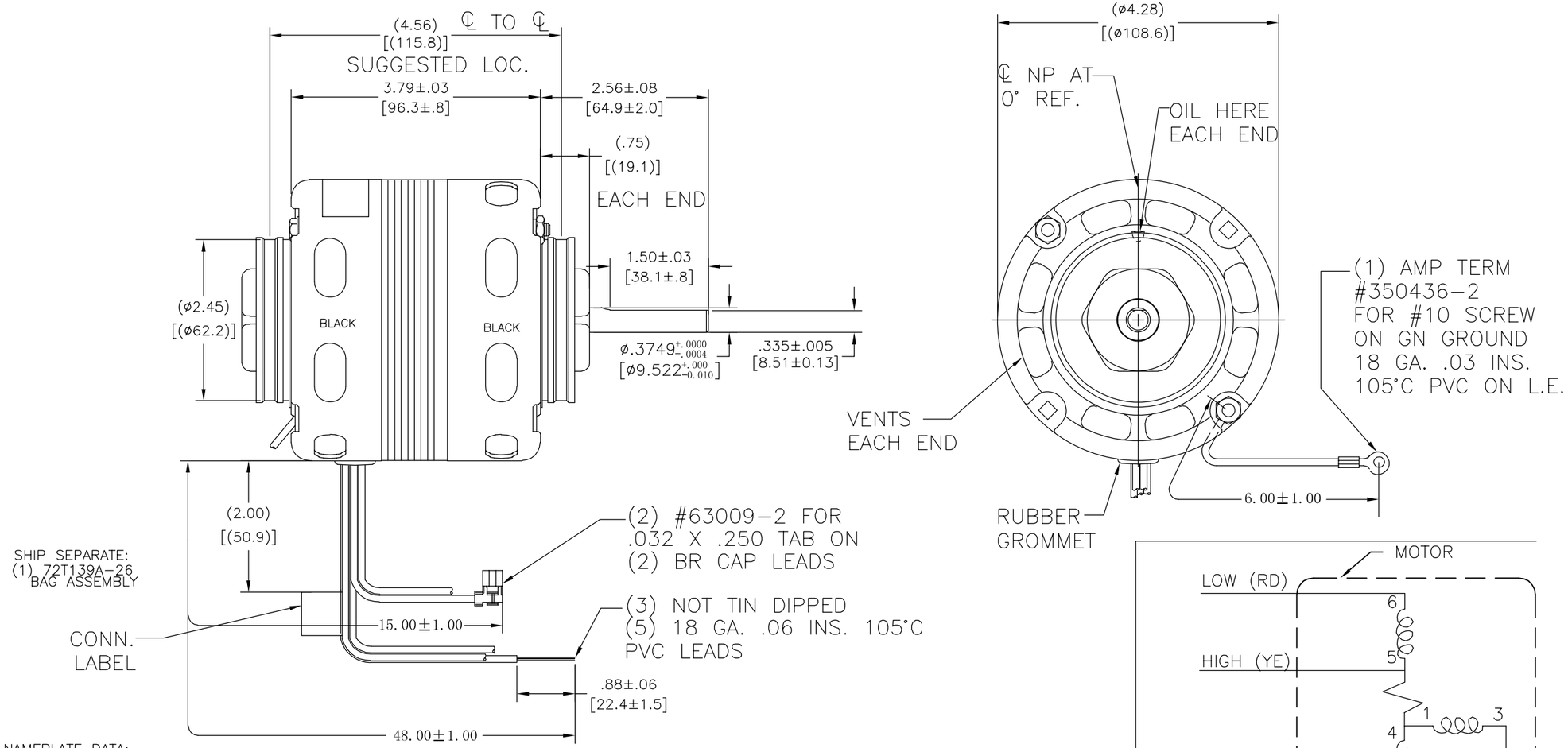

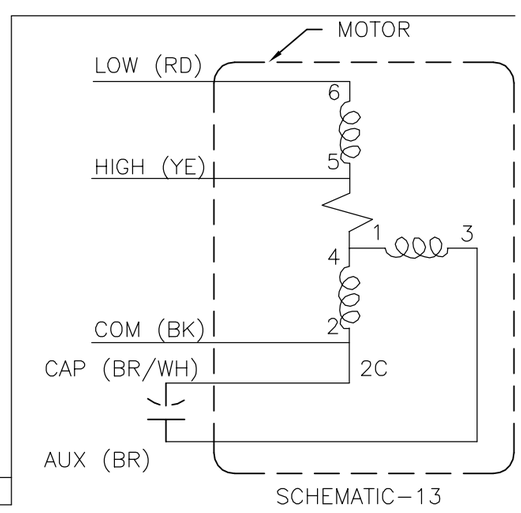

SCHEMATIC-13

NAMEPLATE DATA:

Century

THERMALLY PROTECTED

Tipp City, OH

SER. DAT PO,PLT MOD CE3G018N

208-230V 60HZ .8/.5A 1050/875RPM 1/12HP

AO CONT CWSE USE 4MFD 370VAC CAPACITOR

STOCK NO. 9485

CONN. LABEL 63T473-141	ELECTRICALLY PER SAMPLE S-3862E
CCWLE-CWSE	BOM CHG [M]

CARACTERISTICAS DE GEOMETRIA Y SIMBOLOS
- PLANICIDAD
- RECTITUD
- ANGULARIDAD
- PERPENDICULARIDAD (A ESCUADRA)
- PARALELISMO
- REDONDEZ (CIRCULARIDAD)
- CILINDRICIDAD
- PERFIL DE CUALQUIER SUPERFICIE
- PERFIL DE CUALQUIER LINEA
- VARIACION
- POSICION REAL
- CONCENTRICIDAD
- SIMETRIA

ASME Y14.5M 1994

A MENOS QUE SE ESPECIFIQUE DE OTRA MANERA, LAS TOLERANCIAS DE LAS DIMS; SON LAS SIGUIENTES:

	X	XX	XXX	XXXX
PULG	±.1	±.02	±.005	±.0005
mm	±0.5	±0.13	±0.013	

ANG. ±.50 GRADOS
ELIMINAR REBABAS Y ORILLAS FILOSAS DEL BORDE.
PULG .003-.015 mm 0.1-0.4
FILETEAR ESQUINA: PULG .020 mm 0.5
MAQUINAR SUPERFICIES
PULG 125 mm 3.2
DIMS METRICAS MOSTRADAS [PARENTESIS]

DIBUJADO POR: .
APROBADO POR: .
TERCER ANGULO DE PROYECCION
FECHA EDS: 11-11-2011
REV. FORMATO: H

CONFIDENCIAL: ESTE DIBUJO Y SU INFORMACION SON PROPIEDAD DE USO EXCLUSIVO Y CONFIDENCIAL DE REGAL-BELOIT CORPORATION. Y NO DEBERAN SER REVELADOS, DUPLICADOS, DISTRIBUIDOS O USARSE DE OTRA MANERA SIN EL CONSENTIMIENTO ESCRITO DE REGAL-BELOIT CORPORATION. -TODOS LOS DERECHOS RESERVADOS.

REGAL **REGAL-BELOIT CORPORATION**

DESCRIPCION: OUTLINE

TAMAÑO: C | NUMERO DE DIBUJO: CE3G018

ESCALA: NONE | HOJA: 1

Uncontrolled Copy

版本	ECO	编制	日期	批准	日期
P	0027378	H.REN	07-13-2012	B.SHEN	07-13-2012

CUSTOMER IS SOLELY RESPONSIBLE FOR MOTOR PERFORMANCE AND SUITABILITY IN APPLICATIONS FOR CUSTOMER'S USES

END PLAY .04 MAX.

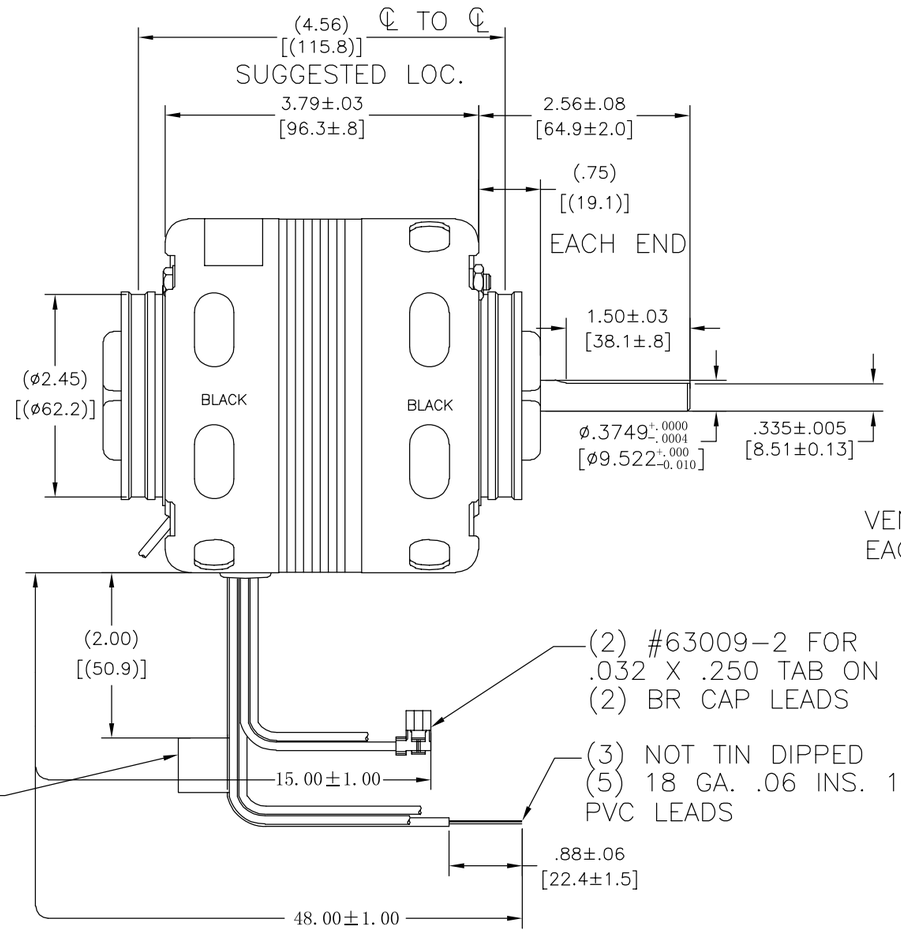

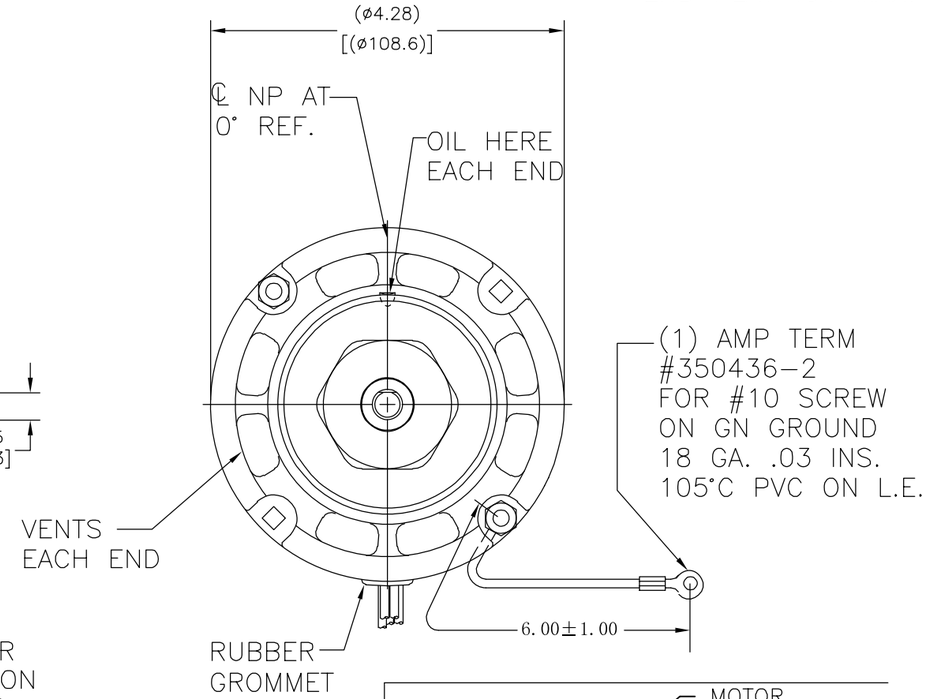

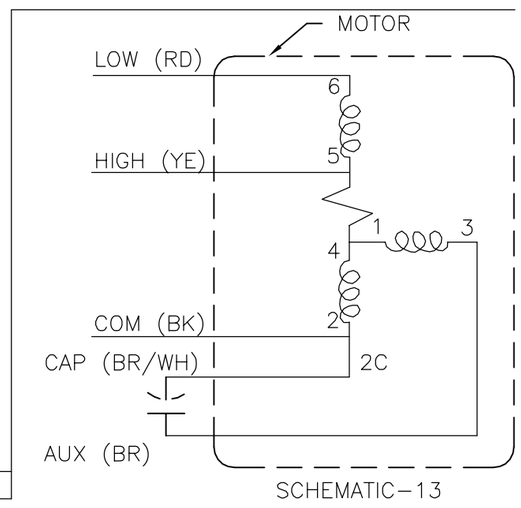

NAMEPLATE DATA:

Century

THERMALLY PROTECTED

Tipp City, OH

SER. DAT PO,PLT MOD CE3G018N

208-230V 60HZ .8/.5A 1050/875RPM 1/12HP

AO CONT CWSE USE 4MFD 370VAC CAPACITOR

STOCK NO. 9485

CONN. LABEL 63T473-141	ELECTRICALLY PER SAMPLE S-3862E
CCWLE-CWSE	BOM CHG [M]

形位公差
平面度
直线度
倾斜度
垂直度
平行度
圆度
圆柱度
面轮廓度
线轮廓度
圆跳动
位置度
同轴度
对称度

ASME Y14.5M 1994

除另有注明
尺寸公差如下：

	X	XX	XXX	XXXX
英寸	±.1	±.02	±.005	±.0005
毫米	±0.5	±0.13	±0.013	

角度 ±.50 度
清理毛刺和尖棱
英寸 .003-.015 毫米 0.1-0.4
内圆角
英寸 .020 毫米 0.5
表面粗糙度
英制 125 米制 3.2
米制尺寸显示在[ ]

绘图: .
批准: .
第三角投影
图纸格式发布日期 11-11-2011
图纸格式版本 H

机密：本图纸及相关信息所有权归REGAL-BELOIT CORPORATION。未经REGAL-BELOIT CORPORATION书面授权，不得泄露、复制、传播或作其他用途。—版权所有

REGAL-BELOIT CORPORATION

名称 OUTLINE

图幅 C 图号 CE3G018

比例 NONE 页号 1