Uncontrolled Copy

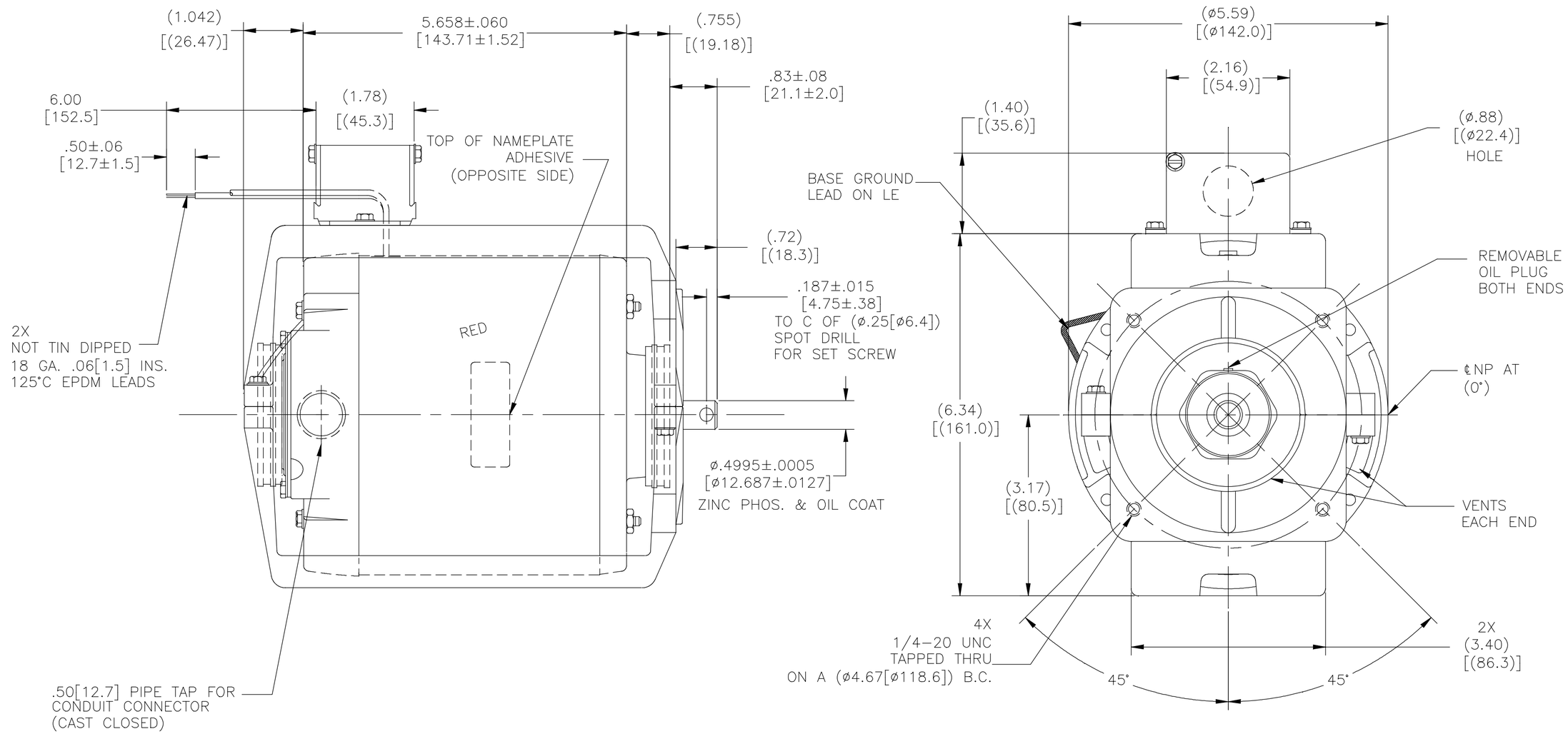

NOTES:
1. ENVELOPE ASSEMBLY 1A038201 SHIPS WITH MOTOR.
2. TIGHTEN RESILIENT BASE SCREWS (4) TO 63–77 IN–LBS.
3. MAX PALLET SIZE 42 X 42 X 44[1067 X 1067 X 1118] MAX HEIGHT.
4. ENDPLAY: MAX. .04[1.0].

DRAWING REVISION	REVISION BY	DATE
C	M.ARGUELLES	7/24/2019
ECO	APPROVED BY	DATE
ECO–0167651	M.ARGUELLES	7/24/2019
ECO DESCRIPTION		
UPDATED CHANGES SEE ECO		

COPYRIGHT REGAL BELOIT AMERICA, INC. ALL RIGHTS RESERVED.
PROPRIETARY AND CONFIDENTIAL INFORMATION — THIS DOCUMENT IS THE PROPERTY OF REGAL BELOIT AMERICA, INC. ("OWNER") AND CONTAINS OWNER'S PROPRIETARY INFORMATION. ANY PERSON, CORPORATION OR OTHER FIRM RECEIVING IT IS DEEMED, BY RECEIVING IT, TO AGREE THAT IT, AND/OR ANY PART OF IT, SHALL NOT BE DISCLOSED TO ANY PERSON, CORPORATION OR OTHER ENTITY, DUPLICATED, AND/OR USED, EXCEPT AS EXPRESSLY APPROVED IN WRITING IN ADVANCE BY OWNER. THIS DOCUMENT SHALL BE RETURNED TO OWNER UPON REQUEST. IT MAY BE SUBJECT TO CERTAIN RESTRICTIONS UNDER APPLICABLE EXPORT CONTROL LAWS AND REGULATIONS.

TOLERANCES UNLESS OTHERWISE SPECIFIED

DEC.	INCH	mm	ANGLE
.X	±0.1	[±2.5]	±0.5°
.XX	±0.02	[±0.51]	
.XXX	±0.005	[±0.127]	
.XXXX	±0.0005	[±0.0127]	

REMOVE BURRS & BREAK SHARP EDGES .003/.015 [.076/.381] X 45°
CORNER FILLETS R.02 [.51]
MACHINED SURFACES 1.25 INCH / 3.2 mm
mm SHOWN IN [BRACKETS]

DRAWN BY:	M.AVILA
DATE:	07–09–2019
APPROVED BY:	M.AVILA
DATE:	07–09–2019
REFERENCE	
THIRD ANGLE PROJECTION	

Regal Beloit America, Inc.

DESCRIPTION: OUTLINE

MATERIAL | PROCESS/FINISH

SIZE: C | DWG NO: 939L | SHEET: 1