Uncontrolled Copy

GENERAL INFORMATION:

SHAFT RUNOUT:	.001[.03] T.I.R. PER INCH LENGTH OF EXTENSION
END PLAY:	.010[.25] TO .063[1.60]
BEARINGS:	SLEEVE
MOUNTING POSITION:	ALL ANGLE

ELECTRICAL DATA:

OVERLOAD PROTECTOR:	AUTOMATIC RESET (SENSATA 7AM 036)
LEADS:	NO. 18 GA., .06[1.5] THK. PVC 105°C INSUL.
REVERSING PLUGS:	NO. 18 GA., .03[.8] THK. XLP 125°C INSUL.
GROUND LEAD:	NO. 16 GA., .03[.8] THK. (GREEN/YELLOW) INSUL.

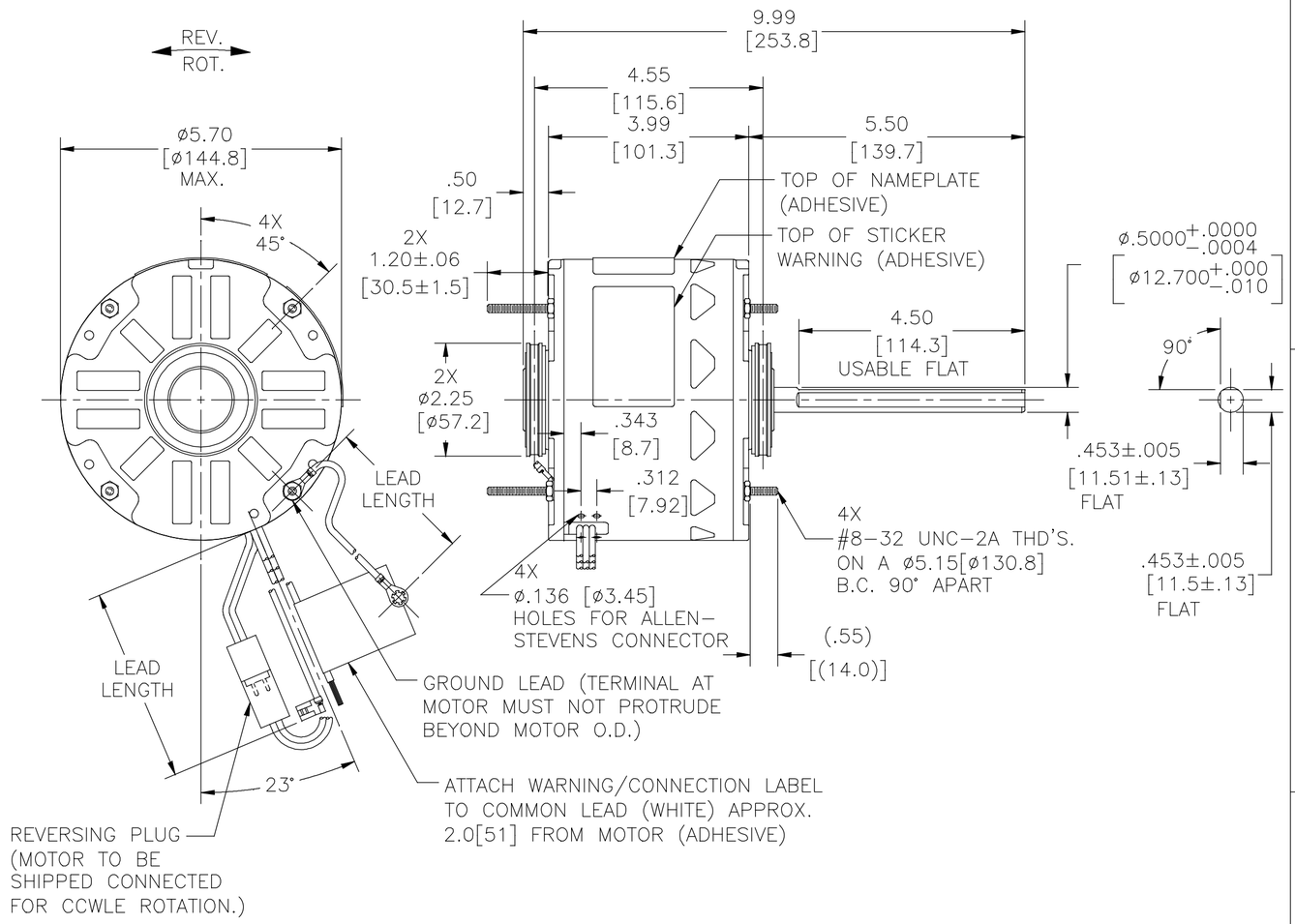

NAMEPLATE DATA:	EXTERNAL CONNECTION DIAGRAM
MODEL NO.: F48AA17A01 CUST. P/N: 443B HP: 1/4 ROT.: REVERSIBLE RPM: 1075 TYPE: UF FRAME: 48Y VOLTS: 208−230 PH: 1 AMPS: 1.5 HZ: 60 INS.: B AMB.: 60° C DUTY: AIR OVER CAP.: 5 MFD/370 V ENCL: SEMI−ENCL. UL LOGO CSA LOGO THERMALLY PROTECTED	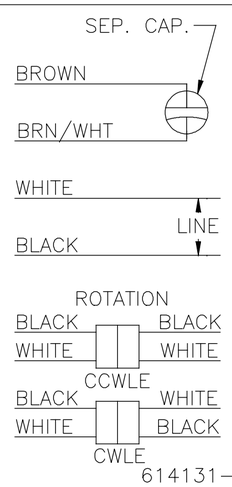

PERFORMANCE CURVE NO.	TORQUE @ 1075 RPM (25°C)	APPROVED SAMPLE	UL COMPONENT		CSA	
			FILE #	CCN #	FILE #	CLASS #
C32769	22.8 OZ. FT.	0701190B	E46412	PRGY2	LR43341	4211−01

COLOR	LENGTH	TERMINAL OR STRIP LENGTH
GREEN/YELLOW (GROUND)	11.0/13.0 [279/330]	#10 EYELET
BLACK/WHITE	3.0/5.0 [76/127]	REVERSING PLUG
BROWN	35.0/37.0 [889/940]	.25[6.4] FLAG
BROWN/WHITE	35.0/37.0 [889/940]	.25[6.4] FLAG
WHITE	35.0/37.0 [889/940]	.50[12.7] SKIN
BLACK	35.0/37.0 [889/940]	.50[12.7] SKIN

LEAD DATA

MAIN FRAME − OLE	OPEN
END FRAME − OLE	OPEN
MAIN FRAME − LE	ENCLOSED
END FRAME − LE	OPEN

ENCLOSURE

CUSTOMER	DISTRIBUTION SERVICE

DRAWING REVISION	REVISION BY	DATE
D	J. RUPERT	07−16−2018
ECO	APPROVED BY	DATE
ECO−0148915	J. RUPERT	07−16−2018

ECO DESCRIPTION
CHANGED GROUND LEAD TO 16 GAGE

COPYRIGHT REGAL BELOIT AMERICA, INC. ALL RIGHTS RESERVED.
PROPRIETARY AND CONFIDENTIAL INFORMATION – THIS DOCUMENT IS THE PROPERTY OF REGAL BELOIT AMERICA, INC. ("OWNER") AND CONTAINS OWNER'S PROPRIETARY INFORMATION. ANY PERSON, CORPORATION OR OTHER FIRM RECEIVING IT IS DEEMED, BY RECEIVING IT, TO AGREE THAT IT, AND/OR ANY PART OF IT, SHALL NOT BE DISCLOSED TO ANY PERSON, CORPORATION OR OTHER ENTITY, DUPLICATED, AND/OR USED, EXCEPT AS EXPRESSLY APPROVED IN WRITING IN ADVANCE BY OWNER. THIS DOCUMENT SHALL BE RETURNED TO OWNER UPON REQUEST. IT MAY BE SUBJECT TO CERTAIN RESTRICTIONS UNDER APPLICABLE EXPORT CONTROL LAWS AND REGULATIONS.

DRAWN BY: J. RUPERT
DATE: 04−27−2011
APPROVED BY: J. RUPERT
DATE: 04−27−2011
REFERENCE: .
THIRD ANGLE PROJECTION

Regal Beloit America, Inc.

DESCRIPTION: MODEL−RFHP−48FR
OUTLINE

MATERIAL: .
PROCESS/FINISH: .

SIZE: C | DWG NO: 443B | SHEET: 1