Uncontrolled Copy

REV	ECO	REV BY	DATE	APPD	DATE
C	0025525	E.SINECIO	04-23-2012	R.RASCON	04-23-2012

GENERAL INFORMATION:

SHAFT RUNOUT: .001 [.03] T.I.R. PER INCH LENGTH OF EXTENSION

BEARINGS: 203 BALL

MOUNTING POSITION: HORIZONTAL

ELECTRICAL DATA:

OVERLOAD PROTECTOR: AUTOMATIC RESET (T.I. 7AM 036)

LEADS: NO. 18 GA., .06 [1.5] THK. 105°C PVC INSUL.

GROUND LEAD: NO. 18 GA., .03 [.8] THK. (GRN/YEL) INSUL.

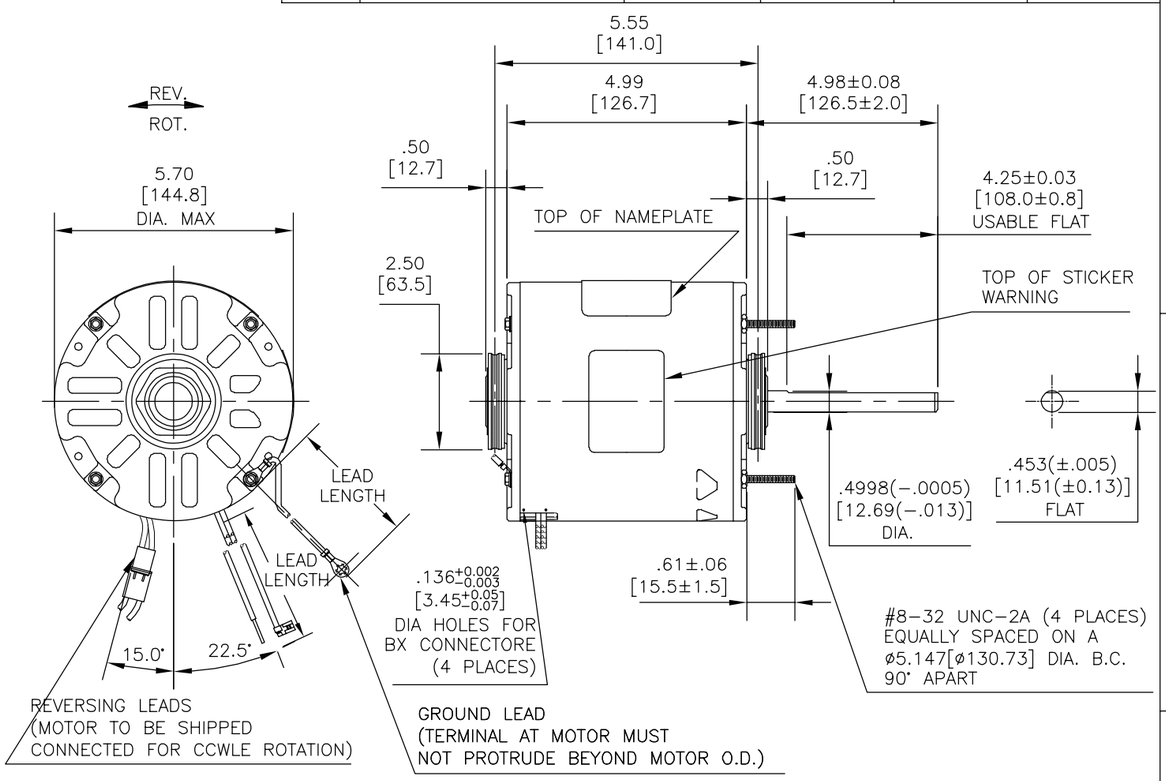

NAMEPLATE DATA:	EXTERNAL CONNECTION DIAGRAM
MODEL NO.: F48Z03A01 CUST. P/N: 149A HP: 1/2,1/3,1/4 ROT.: REVERSIBLE RPM: 1075 TYPE: UF FRAME: 48Y VOLTS: 208−230 PH: 1 AMPS: 3.0/2.0/1.5 HZ: 60 INS.: B AMB.: 60°C DUTY: AIR OVER CAP.: 7.5MFD/370V ENCL: SEMI−ENCL. UL LOGO CSA LOGO THERMALLY PROTECTED	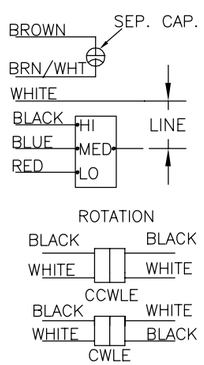

PERFORMANCE CURVE NO.	TORQUE @ 1075 RPM (25°C)	APPROVED SAMPLE	UL COMPONENT FILE #	UL COMPONENT CCN #	CSA FILE #	CSA CLASS #
C32662	43.48 OZ. FT.	0603111B	E46412	PRGY2	LR43341	4211−01

GRN/YEL(GRD)	11/13 [279/330]	#10 EYELET
BLACK/WHITE	3/5 [76/127]	REVERSING PLUG(MALE)
BLACK/WHITE	3/5 [76/127]	REVERSING PLUG(FEMALE)
BROWN	24/22 [610/559]	.25[6.35] FLAG
BROWN/WHITE	24/22 [610/559]	.25[6.35] FLAG
WHITE	24/22 [610/559]	.50[12.7] SKIN
BLACK	24/22 [610/559]	.50[12.7] SKIN
BLUE	24/22 [610/559]	.50[12.7] SKIN
RED	24/22 [610/559]	.50[12.7] SKIN
COLOR	LENGTH	TERMINAL OR STRIP LENGTH

LEAD DATA

MAIN FRAME − OLE	SEMI−ENCLOSED
END FRAME − OLE	OPEN
MAIN FRAME − LE	ENCLOSED
END FRAME − LE	OPEN

ENCLOSURE

CUSTOMER	DISTRIBUTION

GEOMETRIC CHARACTERISTICS & SYMBOLS
- ▱ FLATNESS
- — STRAIGHTNESS
- ∠ ANGULARITY
- ⊥ PERPENDICULARITY (SQUARENESS)
- // PARALLELISM
- ○ ROUNDNESS (CIRCULARITY)
- ⌭ CYLINDRICITY
- ⌓ PROFILE OF ANY SURFACE
- ⌒ PROFILE OF ANY LINE
- ↗ RUNOUT
- ⌖ TRUE POSITION
- ◎ CONCENTRICITY
- ⌯ SYMMETRY

ASME Y14.5M 1994

REGAL−BELOIT CORPORATION (RBC) PROVIDES TECHNICAL ASSISTANCE TO OUR CUSTOMERS IN SEVERAL AREAS. SINCE RBC DOES NOT RECEIVE ALL DATA CONCERNING THE USE AND APPLICATION OF THE MOTOR, THE SUITABILITY OF THE MOTOR FOR THE APPLICATION MUST BE DETERMINED BY THE CUSTOMER.

DIMENSIONS WITHOUT TOLERANCES ARE FOR REFERENCE ONLY.

DR BY: AMY 03−16−2007
APPD: . .
THIRD ANGLE PROJECTION
EDS DATE 02−22−2008
FORMAT REV G

CONFIDENTIAL: THIS DRAWING AND ITS INFORMATION ARE THE EXCLUSIVE AND CONFIDENTIAL PROPERTY OF REGAL−BELOIT CORPORATION AND ARE NOT TO BE DISCLOSED, DUPLICATED, DISTRIBUTED OR OTHERWISE USED WITHOUT THE WRITTEN CONSENT OF REGAL−BELOIT CORPORATION. −ALL RIGHTS RESERVED.

REGAL−BELOIT CORPORATION

DESCRIPTION: MODEL−RFHP−48FR OUTLINE

SIZE: C | DWG NO: F48Z03A01

SCALE: NONE | SHEET 1

Uncontrolled Copy

REVISION:	ECO	REVISADO POR:	FECHA:	APROBADO POR:	FECHA:
C	0025525	E.SINECIO	04-23-2012	R.RASCON	04-23-2012

INFORMACION GENERAL:

OSCILACION DE FLECHA:	.001 [.03] T.I.R. PER INCH LENGTH OF EXTENSION
JUEGO AXIAL:	.010 A .063 [.25 A 1.60]
BALEROS:	MANGA
POSICION DEL MONTAJE:	HORIZONTAL

INFORMACION ELECTRICA:

SOBRECARGA DEL PROTECTOR:	REINICIO AUTOMATIC (T.I. 7AM 036)
CABLES:	NO. 18 GA., .06 [1.5] THK. PVC 105°C AISLAM.
CABLE DE TIERRA:	NO. 18 GA., .03 [.8] THK. (VERDE) AISLAM.

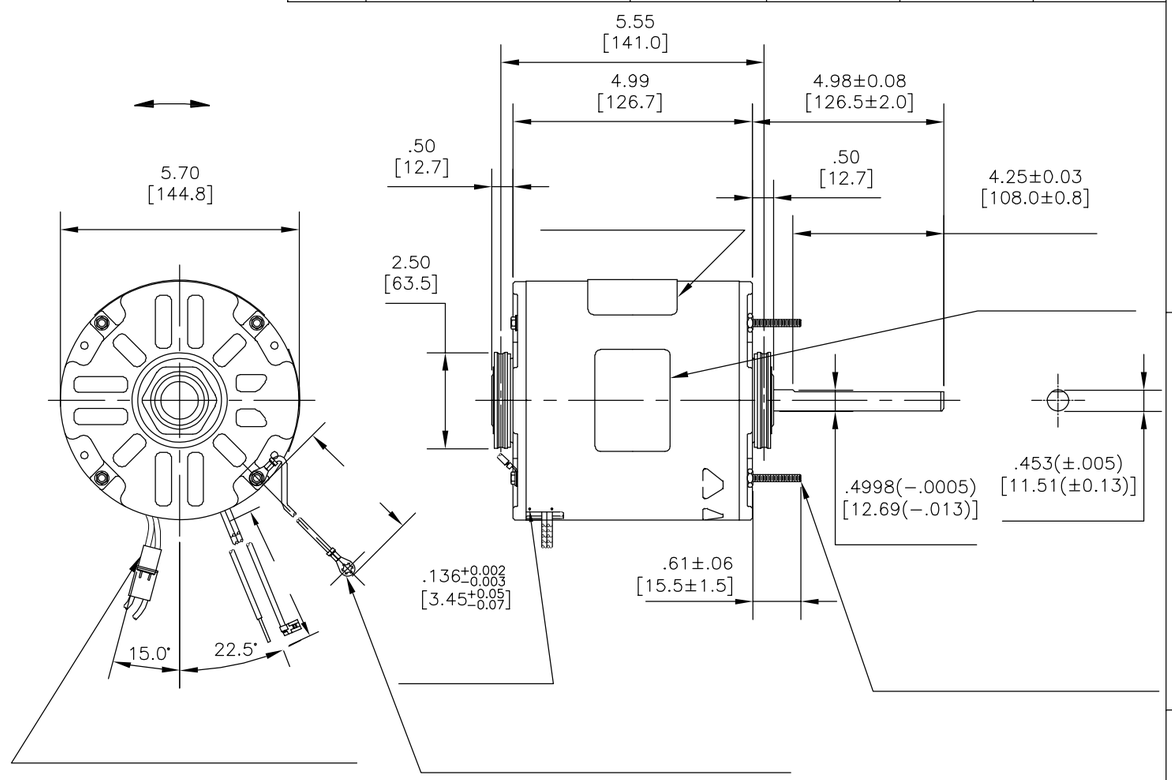

INFORMACION DE ETIQUETA:	DIAGRAMA DE CONEXION EXTRNA
MODEL NO.: F48Z03A01 CUST. P/N: 149A HP: 1/2,1/3,1/4 ROT.: REVERSIBLE RPM: 1075 TYPE: UF FRAME: 48Y VOLTS: 208−230 PH: 1 AMPS: 3.0/2.0/1.5 HZ: 60 INS.: B AMB.: 60°C DUTY: AIR OVER CAP.: 7.5MFD/370V ENCL: SEMI−ENCL. UL LOGO CSA LOGO THERMALLY PROTECTED	LINE 614131−351

CURVAS DE FUNCIONAMIENTO	TORSION @---- RPM (25°C)	MUESTRA APROBADA	COMPONENTE UL #ARCHIVO	COMPONENTE UL CCN #	CSA #ARCHIVO	CSA CLASE #
C32662	43.48 OZ. FT.	0603111B	E46412	PRGY2	LR43341	4211−01

	11/13 [279/330]	
	3/5 [76/127]	
	3/5 [76/127]	
	24/22 [610/559]	
	24/22 [610/559]	
	24/22 [610/559]	
	24/22 [610/559]	
	24/22 [610/559]	
	24/22 [610/559]	
	LONGITUD	TERMINAL O LONGITUD DE DESFORRE

INFORMACION DE CABLES

DE CARCASA − OLE	
DE TAPA − OLE	
DE CARCASA − LE	
DE TAPA − LE	

TIPO DE MOTOR

CLIENTE	

CARACTERISTICAS DE GEOMETRIA Y SIMBOLOS
- ▱ PLANICIDAD
- — RECTITUD
- ∠ ANGULARIDAD
- ⊥ PERPENDICULARIDAD (A ESCUADRA)
- // PARALELISMO
- ○ REDONDEZ (CIRCULARIDAD)
- ⌀ CILINDRICIDAD
- ⌓ PERFIL DE CUALQUIER SUPERFICIE
- ⌒ PERFIL DE CUALQUIER LINEA
- ↗ VARIACION
- ⌖ POSICION REAL
- ◎ CONCENTRICIDAD
- ⌯ SIMETRIA

ASME Y14.5M 1994

REGAL−BELOIT CORPORATION (RBC) PROVEE ASISTENCIA TECNICA A NUESTROS CLIENTES EN VARIAS AREAS. DESDE QUE RBC NO RECIBE TODOS LOS DATOS EN RELACION AL USO Y A LA APLICACION DEL MOTOR, LA APLICACION ADECUADA DEL MOTOR DEBE SER DETERMINADA POR EL CLIENTE.

DIMENSIONES SIN TOLERANCIA SON DE REFERENCIA SOLAMENTE

DIBUJADO POR: AMY	03−16−2007	
APROBADO POR: .	.	
TERCER ANGULO DE PROYECCION	FECHA EDS: 02−22−2008	REV. FORMATO: G

CONFIDENCIAL: ESTE DIBUJO Y SU INFORMACION SON PROPIEDAD DE USO EXCLUSIVO Y CONFIDENCIAL DE REGAL−BELOIT CORPORATION. Y NO DEBERAN SER REVELADOS, DUPLICADOS, DISTRIBUIDOS O USARSE DE OTRA MANERA SIN EL CONSENTIMIENTO ESCRITO DE REGAL−BELOIT CORPORATION. −TODOS LOS DERECHOS RESERVADOS.

REGAL-BELOIT CORPORATION

DESCRIPCION: MODEL−RFHP−48FR OUTLINE

TAMAÑO: C	NUMERO DE DIBUJO: F48Z03A01	
ESCALA: NONE		HOJA: 1

Uncontrolled Copy

版本	ECO	编制	日期	批准	日期
C	0025525	E.SINECIO	04-23-2012	R.RASCON	04-23-2012

总要求：

轴跳动: .001/1 [.03/25.4](外伸轴)

端部窜动量: .010 - .063 [.25 - 1.60]

轴承: 含油轴承

安装位置: 水平

电气数据：

过载保护: 自动复位 (T.I. 7AM 036)

引线: 18GA，厚.06[1.5] PVC 105℃ 绝缘

接地线: 18GA，厚.03[0.8] 绿色绝缘

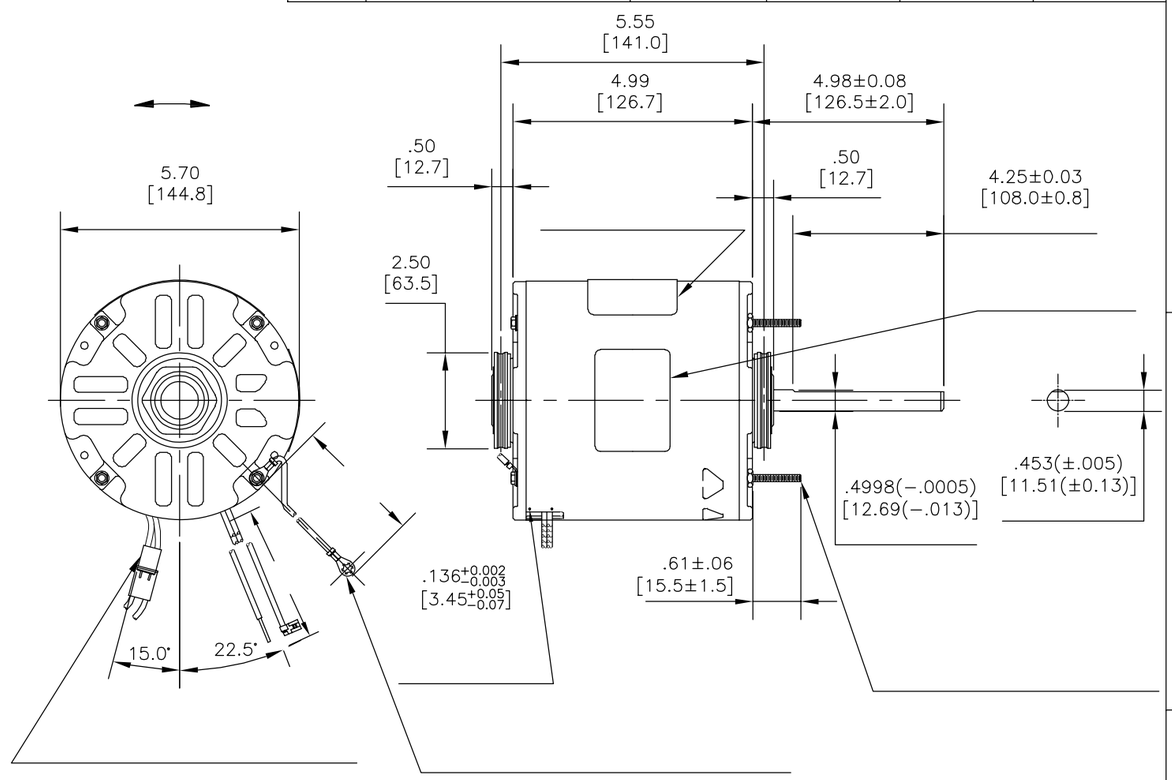

铭牌数据	外部连接详图
MODEL NO.: F48Z03A01 CUST. P/N: 149A HP: 1/2,1/3,1/4 ROT.: REVERSIBLE RPM: 1075 TYPE: UF FRAME: 48Y VOLTS: 208-230 PH: 1 AMPS: 3.0/2.0/1.5 HZ: 60 INS.: B AMB.: 60°C DUTY: AIR OVER CAP.: 7.5MFD/370V ENCL: SEMI-ENCL. UL LOGO CSA LOGO THERMALLY PROTECTED	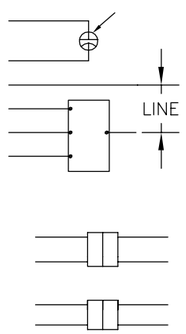 614131-351

性能曲线编号	转矩在----RPM (25° C)	批准样品	UL部件		CSA	
			文件号	指南	文件号	指南
C32662	43.48 OZ. FT.	0603111B	E46412	PRGY2	LR43341	4211-01

颜色	长度	端子或剥线长度
	11/13 [279/330]	
	3/5 [76/127]	
	3/5 [76/127]	
	24/22 [610/559]	
	24/22 [610/559]	
	24/22 [610/559]	
	24/22 [610/559]	
	24/22 [610/559]	
	24/22 [610/559]	
	24/22 [610/559]	

引线数据

非引线端机壳	
非引线端端盖	
引线端机壳	
引线端端盖	

开启方式

用户	

形位公差
- 平面度
- 直线度
- 倾斜度
- 垂直度
- 平行度
- 圆度
- 圆柱度
- 面轮廓度
- 线轮廓度
- 圆跳动
- 位置度
- 同轴度
- 对称度

ASME Y14.5M 1994

REGAL-BELOIT CORPORATION (RBC) 在个别领域为客户提供技术支持。鉴于RBC未收到任何涉及电机使用和应用环境的数据，电机的适用性由客户自己决定。

未注公差尺寸仅供参考。

绘图: AMY	03-16-2007	
批准: .	.	
第三角投影	图纸格式发布日期	02-22-2008
	图纸格式版本	G

机密：本图纸及相关信息所有权归REGAL-BELOIT CORPORATION。未经REGAL-BELOIT CORPORATION书面授权，不得泄露、复制、传播或作其他用途。—版权所有

REGAL-BELOIT CORPORATION

名称: MODEL-RFHP-48FR OUTLINE

图幅: C | 图号: F48Z03A01

比例: NONE | 页号: 1