RPM-AC FINNED FRAME ALTERNATING CURRENT MOTOR
HL215T NEMA

619704-001

ENCLOSURE: TOTALLY ENCLOSED

COOLING: FAN COOLED

MOUNTING: FOOT

DRIVE METHOD: COUPLED

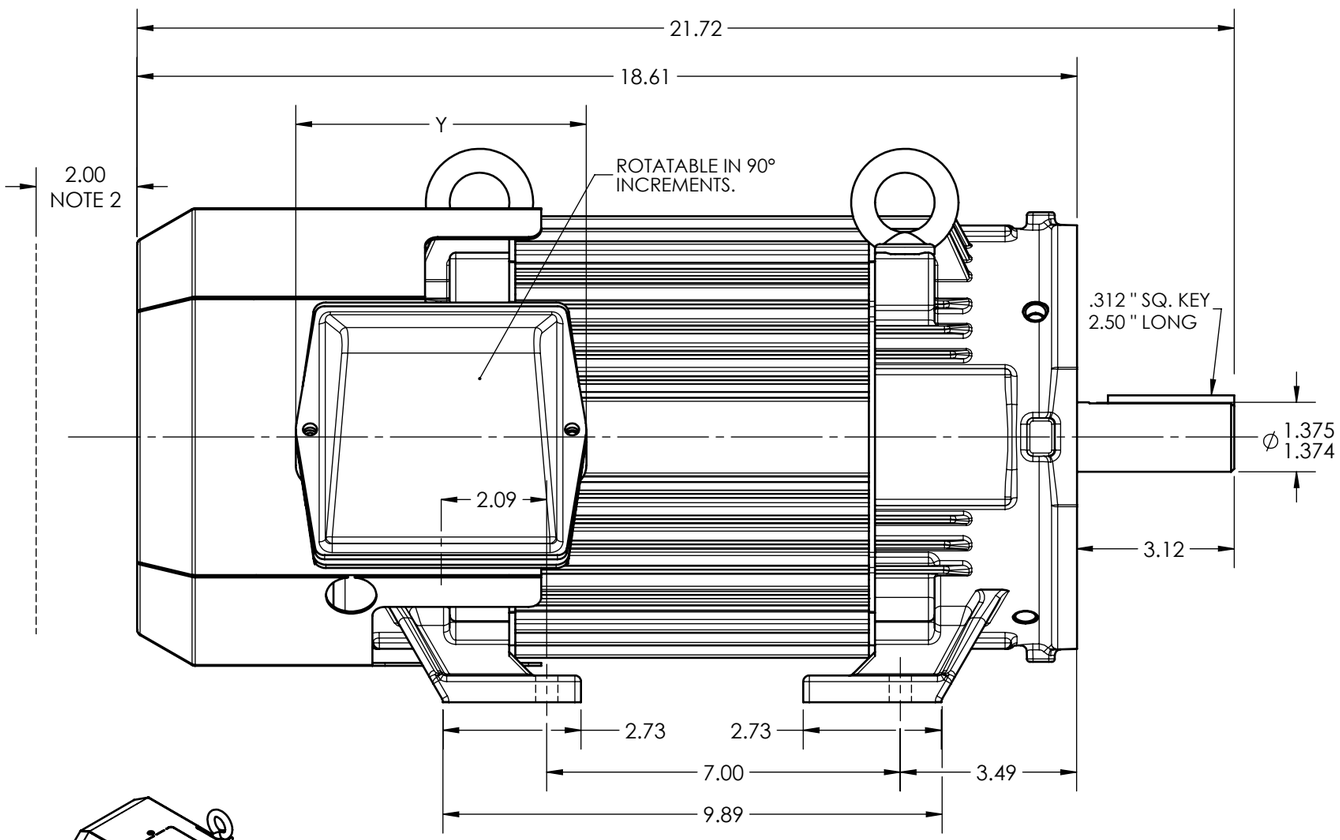

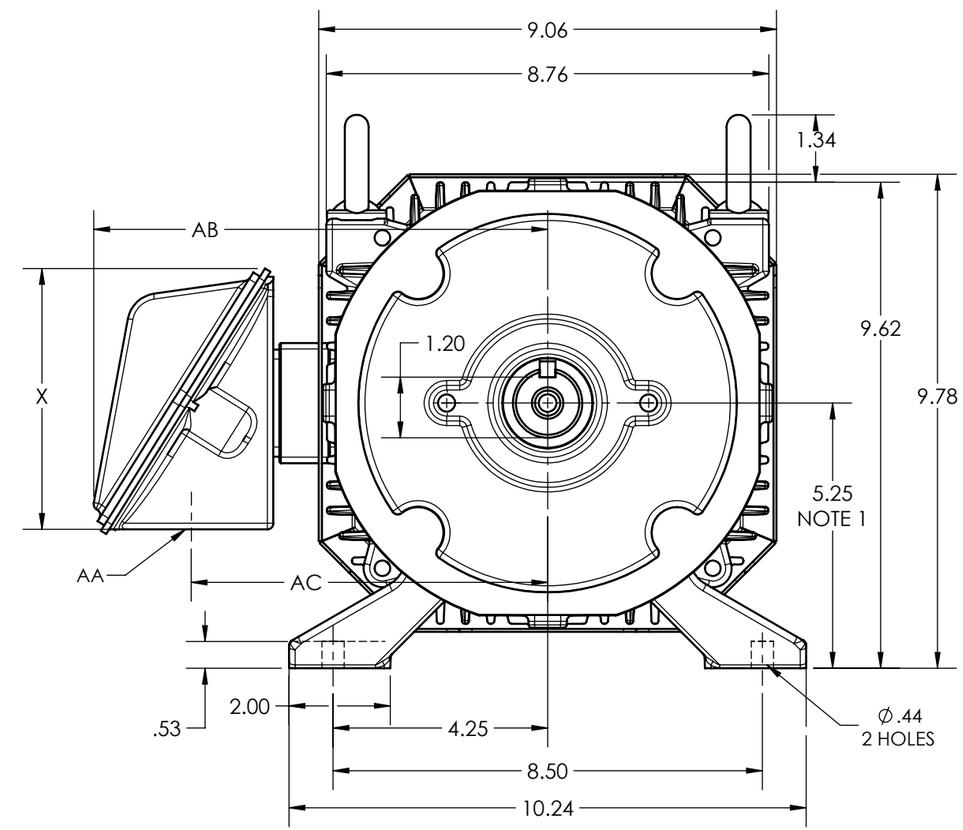

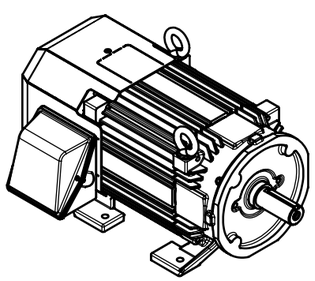

DIMENSIONS ARE IN INCHES

MOTOR WEIGHT: 170 LBS. (MAY VARY 15 % FOR NON-STANDARD RATINGS AND/OR ACCESSORIES.)

TERMINAL BOX MAY BE LOCATED F1, F2, OR F3 IF SPECIFIED.
TERMINAL BOX MAY BE LOCATED DRIVE END OR OPPOSITE DRIVE END IF SPECIFIED.
REFER TO DATA TRANSMITTAL OR PARTS LIST FOR TERMINAL BOX PART NUMBER

TERMINAL BOX	X	Y	AA	AB	AC	MAX AMPS	REMARKS
706320-003A	3.88	5.00	1.12	8.20	6.50	40	STEEL
706320-005A	5.00	6.12	1.75/2.00	9.20	7.06	75	STEEL
706320-005A	5.00	6.12	1.75/2.00	9.20	7.06	85	STEEL - WITH TERMINAL STRIP
706320-004C	5.00	5.75	1.00 TAP	9.10	7.06	60	CAST IRON (AS SHOWN)
706320-004C	5.00	5.75	1.00 TAP	9.10	7.06	85	CAST IRON - WITH TERMINAL STRIP

CUSTOMER IS RESPONSIBLE FOR DETERMINING THAT BALDOR'S PRODUCT WILL PERFORM SUITABLY IN THE INTENDED APPLICATION

NOTES:
1. SHAFT HEIGHT WILL NOT BE EXCEEDED. SHIMS UP TO 0.06 INCHES IN THICKNESS ARE USUALLY REQUIRED FOR COUPLED OR GEARED MACHINES.
2. WALLS OR OBSTRUCTIONS MUST NOT ENCROACH ON AIR INLET SPACE.

REV. DESC: ADD WRENCH CLEARANCE TO BRACKETS			
REV: C	VERSION: 03	REVISED: 11:04:55 11/04/2016	TDR: 000001000919
MODEL NO. 619704-001			REF: -
BY: USCOCRE			B

BALDOR

DIM SHEET,NEMA HL215T,RPM-AC FL1838,TEFC

619704-001