07LYH347

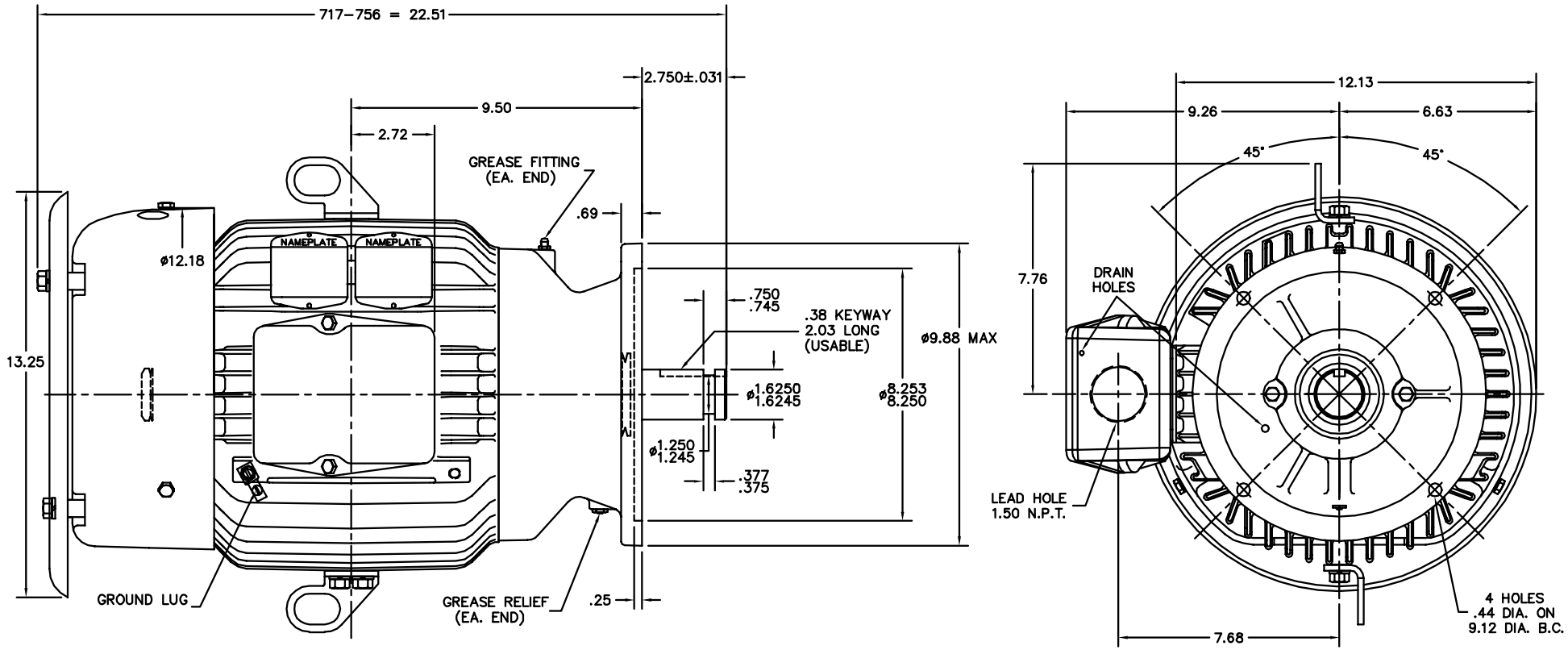

07LYH347

CUSTOMER IS RESPONSIBLE FOR DETERMINING THAT BALDOR'S PRODUCT WILL PERFORM SUITABLY IN THE INTENDED APPLICATION.

REV. DESC: CHANGE GDR LUG CALLOUT			BALDOR
REV. LTR: M	VERSION: 06	TDR: 000001029647	
FILE: \AAA\00014\214	REVISED: 09:50:10 05/24/2017	BY: USZAHAR	VERT 213–5LP & 254LP TEFC 307M (S/P 32–4)
MTL: –			SH 1 of 1