40LYL037

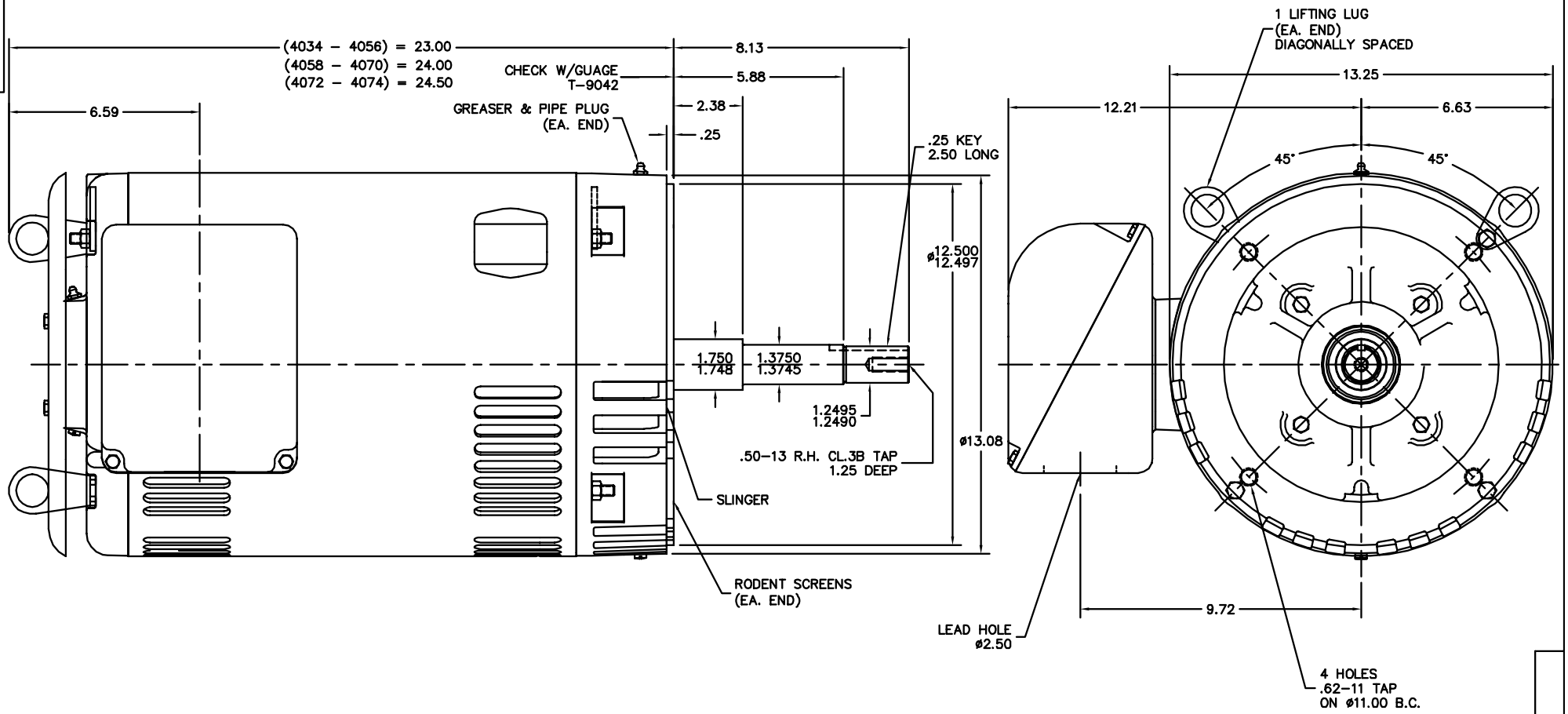

40LYL037

CUSTOMER IS RESPONSIBLE FOR DETERMINING THAT BALDOR'S PRODUCT WILL PERFORM SUITABLY IN THE INTENDED APPLICATION.

REV. DESC: CORRECTED STD LIFTING LUG GRAPHICS			BALDOR - RELIANCE®
REV. LTR: B	VERSION: 02	TDR: 000001118994	
FILE: \AAA\00101\253	REVISED: 12:13:30 09/03/2019	BY: ENSHAB0	VER OPSB 324–6JP W/VERT LIFT, SCREENS & DRIP COVER
MTL: –			SH 1 of 1