07LYG082

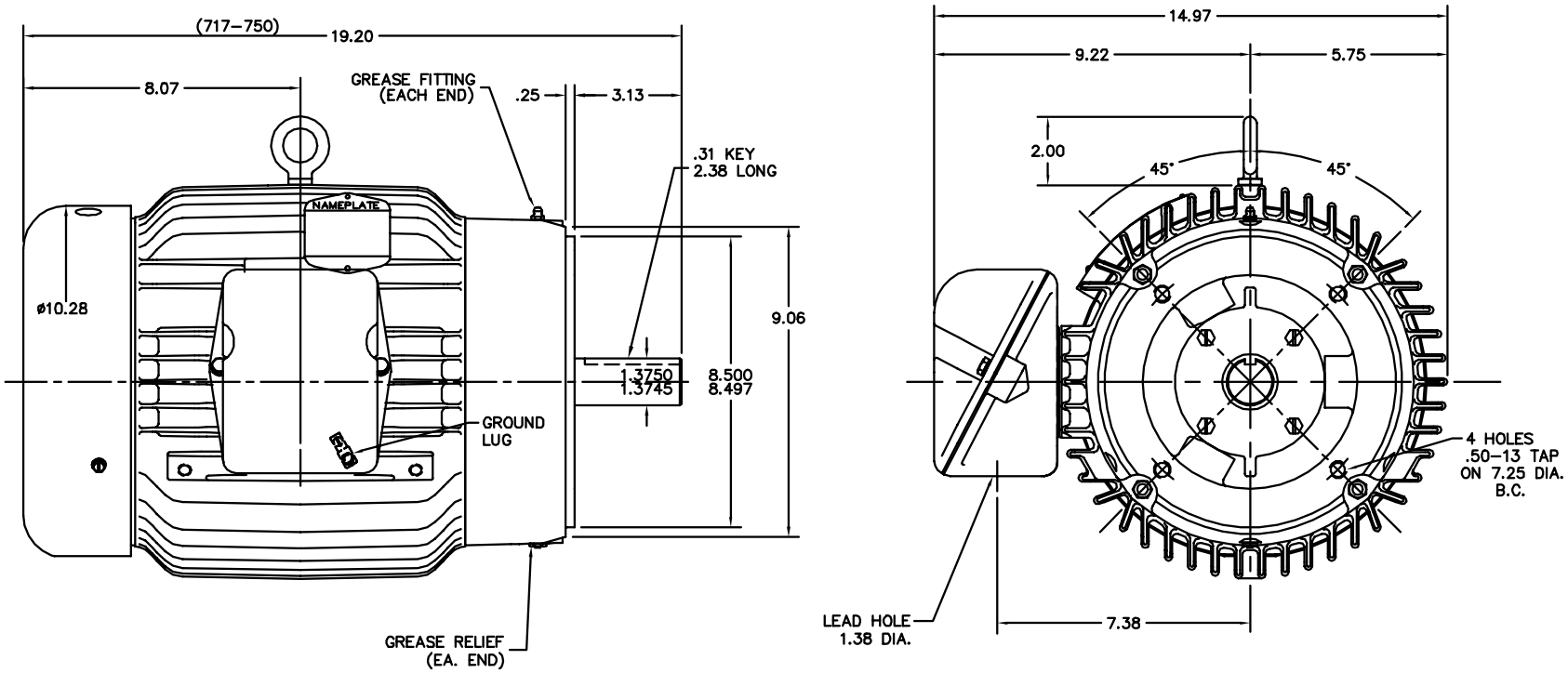

CUSTOMER IS RESPONSIBLE FOR DETERMINING THAT BALDOR'S PRODUCT WILL PERFORM SUITABLY IN THE INTENDED APPLICATION.

REV. DESC: REMOVE LB1086			BALDOR
REV. LTR: G	VERSION: 02	TDR: 000000804114	
FILE: \AAA\00011\486	REVISED: 12:31:59 06/18/2013	BY: ENROSBO	VERT TEFC 307M 213–5TC, HI–EFF
MTL: –			SH 1 of 1

07LYG082