35LYE4124

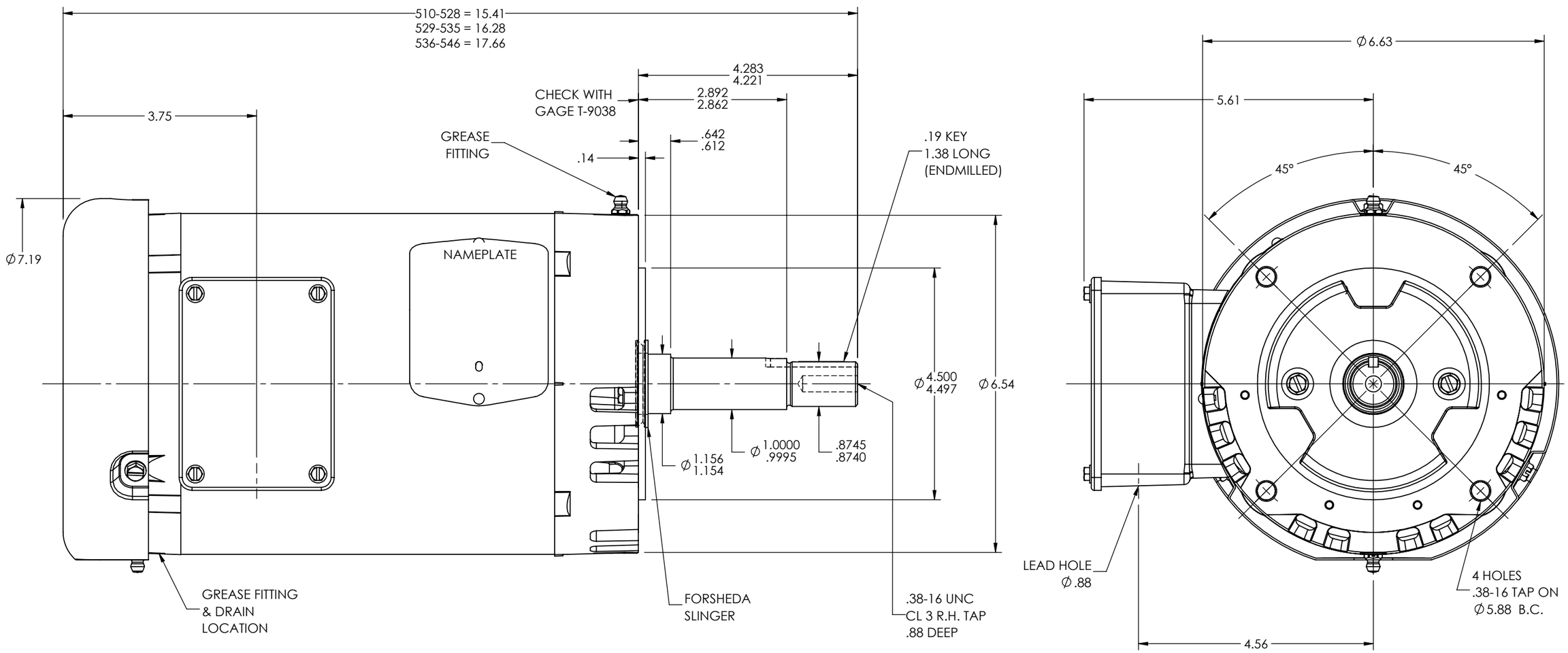

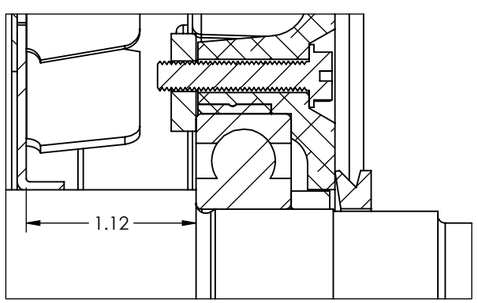

PULLEY END DETAIL

CUSTOMER IS RESPONSIBLE FOR DETERMINING THAT THE PRODUCT WILL PERFORM SUITABLY IN THE INTENDED APPLICATION

REV. DESC: LOADING OF SWD DWG FOR 2D TO 3D CONVERSION - PKG12			
REV: E	VERSION: 05	REVISED: 02:02:11 12/14/2018	TDR: 000001093440
MODEL NO. 35LYE4124			REF: -
BY: ENALEM0			B

BALDOR - RELIANCE®

VERT 143-5JM 35M OPEN W/ SCREENS & DRIP COVER (NO EXT FAN)
SH 1 of 1

35LYE4124