DUTY MASTER ALTERNATING CURRENT MOTORS

SQUIRREL-CAGE INDUCTION
ENCLOSURE: TOTALLY ENCLOSED
SUBMERSIBLE
ONE SIZE SMALLER FLANGE AND SHAFT
FRAMES 180TY THRU 210TY

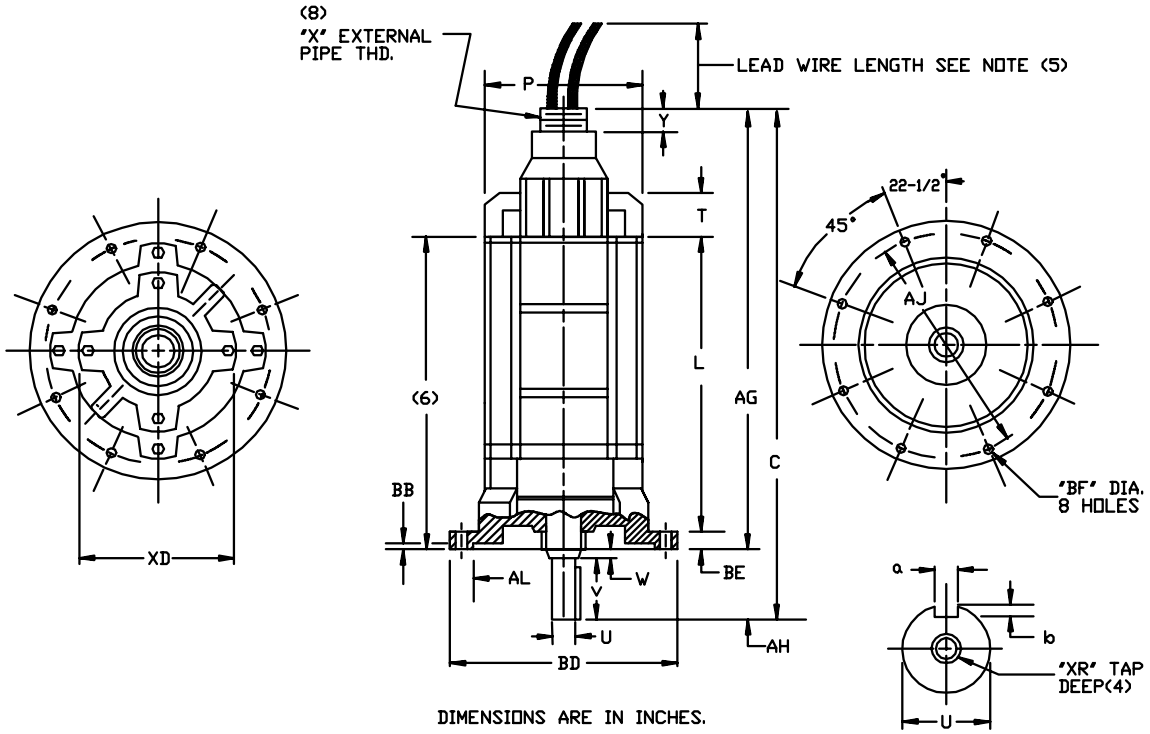

DIMENSIONS ARE IN INCHES.

FRAME	C	L	P	T	U(3)	V	W	AG	AH	AJ	AL(7)
180TY	25.94	16.50	9.62	2.25	.8750	1.25	.31	24.38	1.56	10.00	9.125
210TY	32.41	21.12	11.50	2.25	1.2500	2.00	.28	30.12	2.28	11.50	10.625
(1)											

FRAME	BD(2)	BE	BF	XR(4)	LEAD CONNECTION X	LEAD CONNECTION Y	LEAD CONNECTION XD	BB	B.E. KEYWAY a	B.E. KEYWAY b	B.E. KEYWAY LENGTH	WEIGHT
180TY	11.062	.75	.44	3/8-16	2-1/2-8	1.25	6.75	.12	.187	.09	1.12	200
210TY	12.375	.75	.56	1/2-13	2-1/2-8	1.25	7.75	.12	.250	.12	1.12	315
(1)												

(1) SPECIAL DIMENSIONS ON THIS LINE.

(2) "BD" VARIES ± .010

(3) "U" VARIES +.0000, -.0005

(4) TAP DEPTH ON 180TY THRU 210TY IS 1.38

(5) LEAD WIRE LENGTH AS SPECIFIED ON CERTIFICATION

(6) MINIMUM SUBMERGED DEPTH.

(7) "AL" VARIES +.004, -.000
FACE RUNOUT AND ECCENTRICITY .008 MAX. T.I.R.
PROTECTIVE CONDUIT FURNISHED BY CUSTOMER.

(8) 3" - 8 PIPE THREAD SUPPLIED WITH CABLE SIZES NO. 4 AND LARGER.

CUSTOMER IS RESPONSIBLE FOR DETERMINING THAT BALDOR'S PRODUCT WILL PERFORM SUITABLY IN THE INTENDED APPLICATION.

BALDOR

DIM SHT,180TY THRU 210TY,SUBMERSIBLE,1 SIZE SMALLER FLG/SH
SH 1 of 1

REV. DESC: LOAD TO BUS
REV. LTR: -
VERSION: 00
TDR: 000000925374
FILE: \RGG\00025\093
REVISED: 08:11:59 05/14/2015
BY: RGGWT
MTL: -