35LYH611

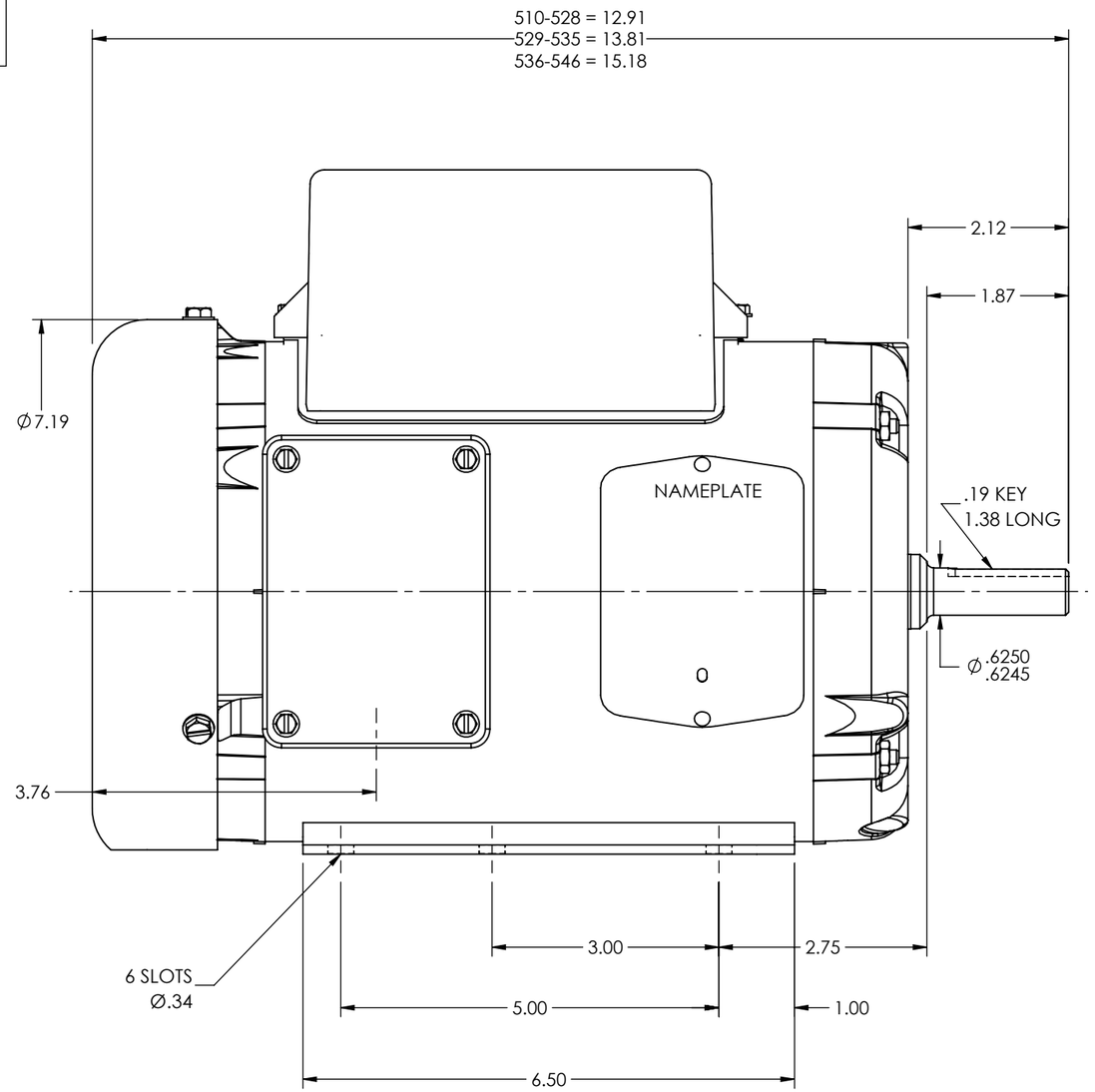

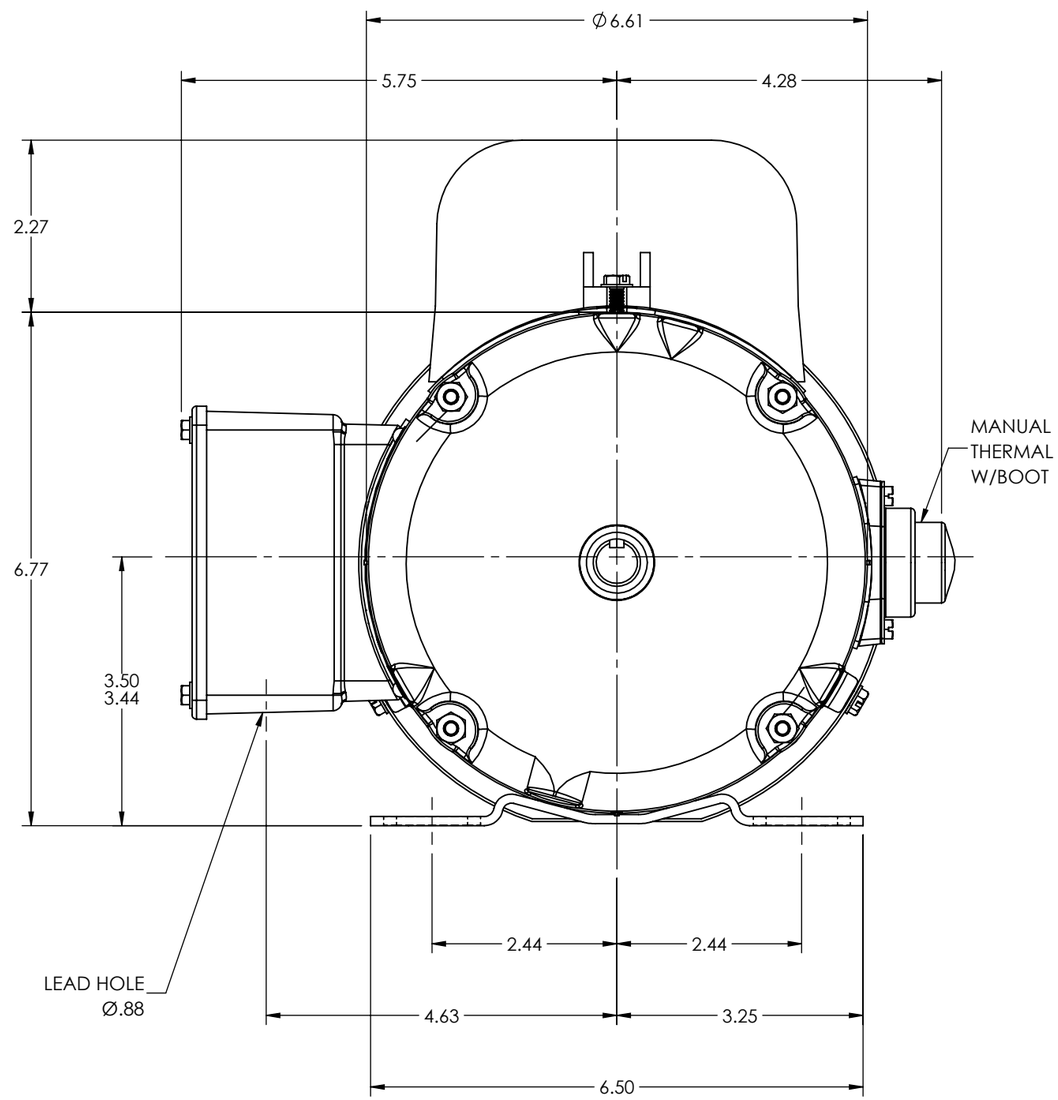

CUSTOMER IS RESPONSIBLE FOR DETERMINING THAT THE PRODUCT WILL PERFORM SUITABLY IN THE INTENDED APPLICATION

REV. DESC: LOADING OF SWD DWG FOR 2D TO 3D CONVERSION - PKG16			
REV: K	VERSION: 02	REVISED: 11:21:16 02/01/2019	TDR: 000001098202
MODEL NO. 35LYH611			REF: -
BY: ENSTEK0			B

BALDOR - RELIANCE®

STD HORZ 56/56H TEFC 35LC W/1"MTO
SH 1 OF 1

35LYH611