33LY0850

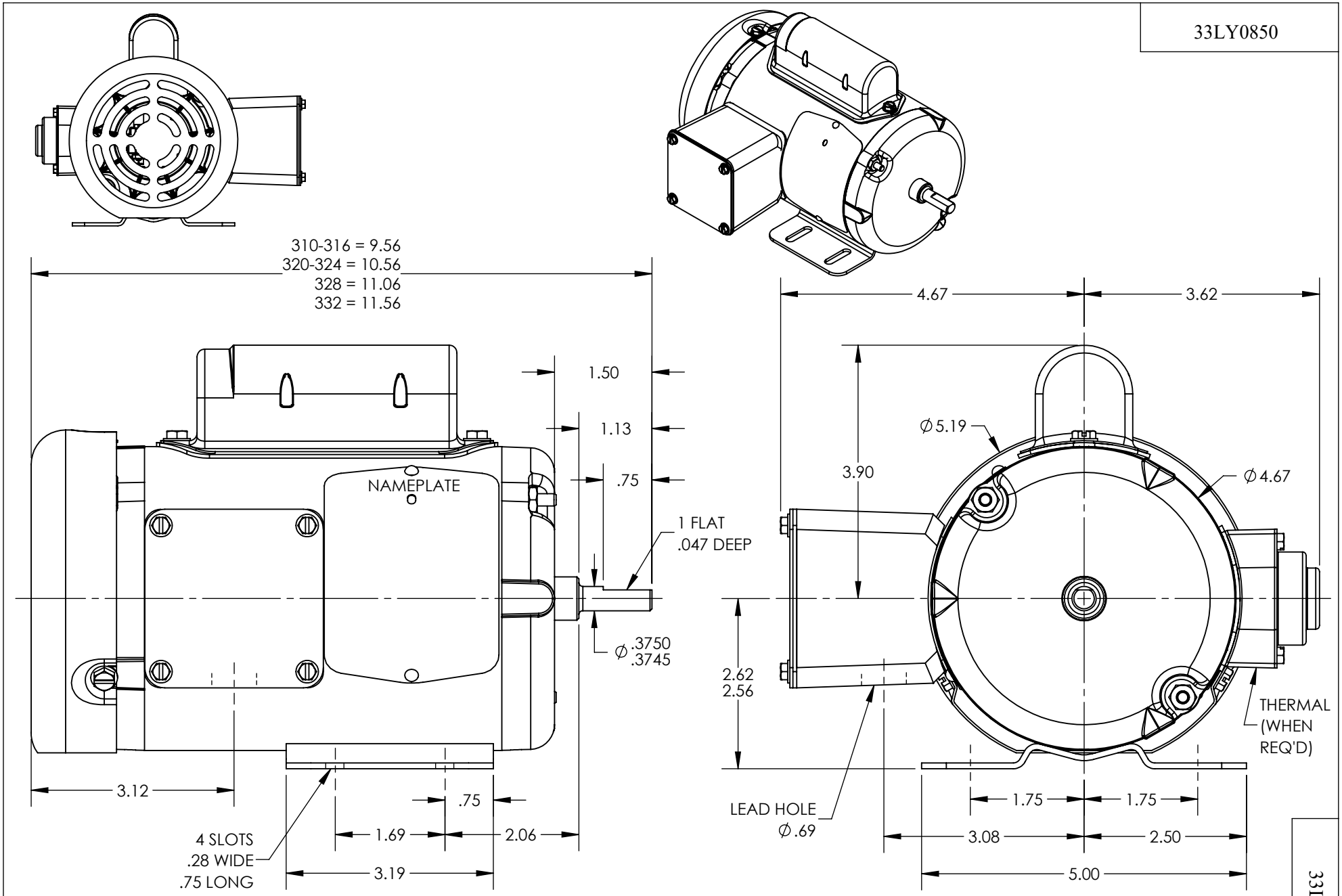

CUSTOMER IS RESPONSIBLE FOR DETERMINING THAT THE PRODUCT WILL PERFORM SUITABLY IN THE INTENDED APPLICATION

REV. DESC: LOAD TO SOLIDWORKS			
REV: P	VERSION: 02	REVISED: 09:05:35 12/05/2018	TDR: 000001092864
MODEL NO. 33ly0850			REF: -
BY: ENJEFD0			

BALDOR - RELIANCE®

STD HORZ MODEL 33L NEMA 42 TEFC

33LY0850

33LY0850