36LYK606

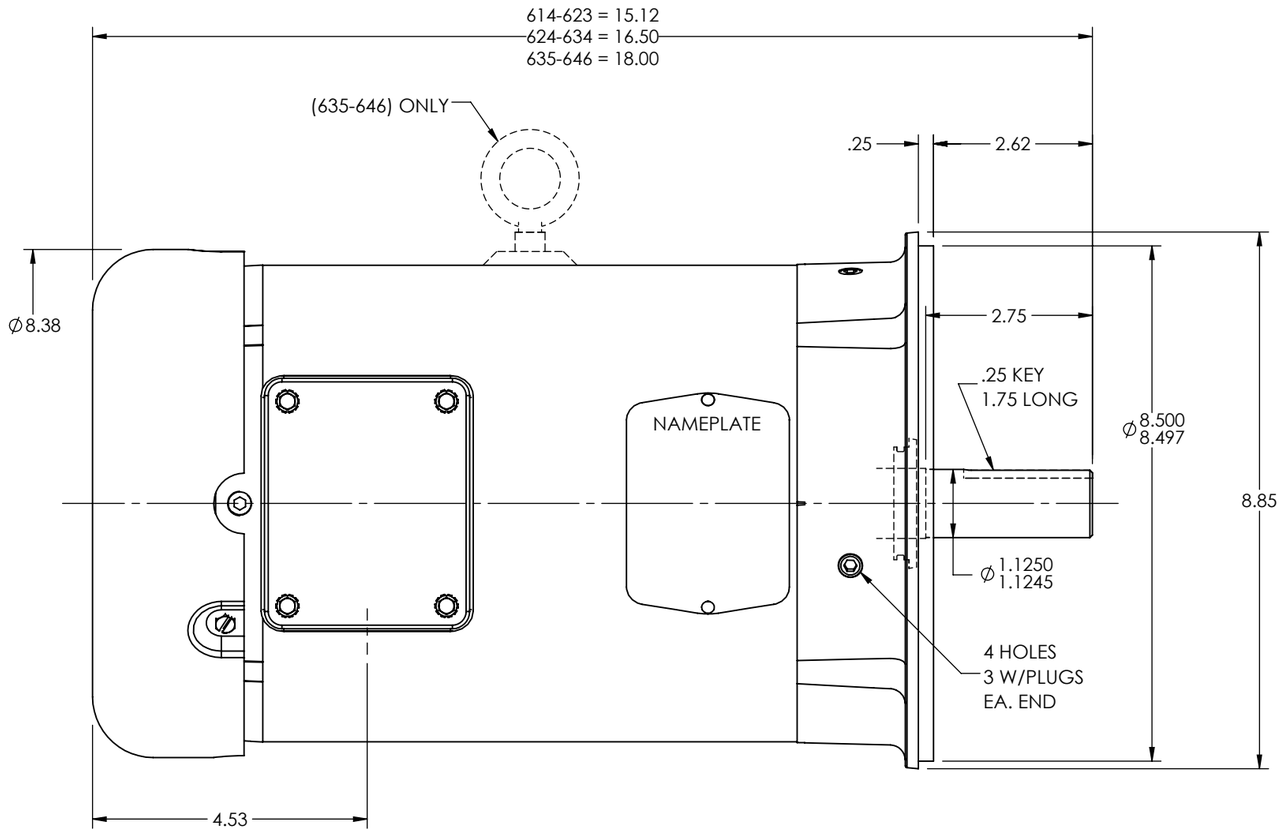

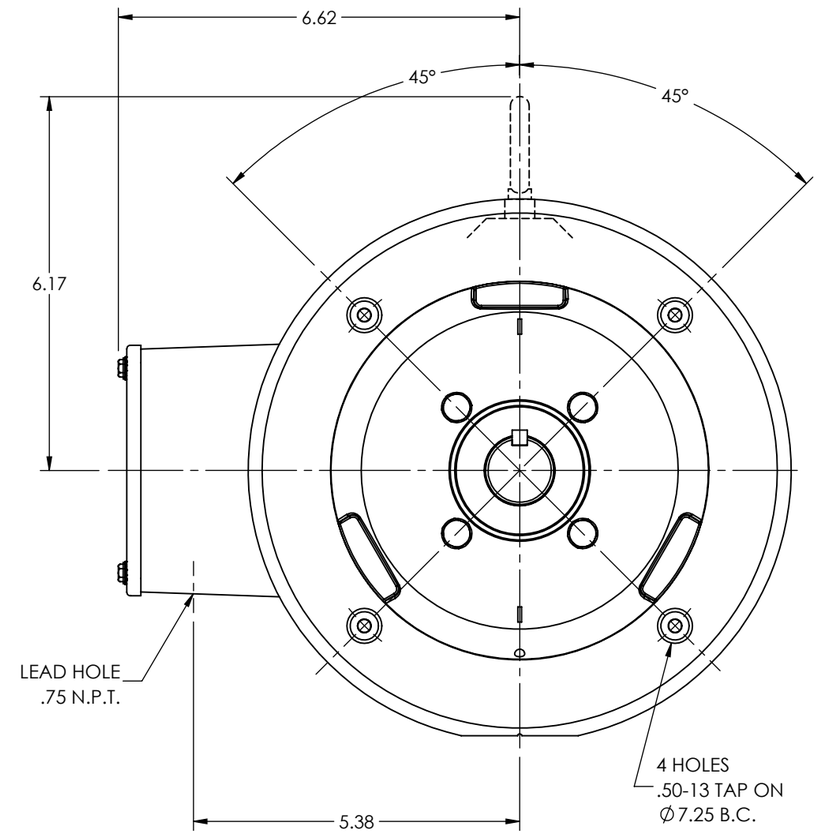

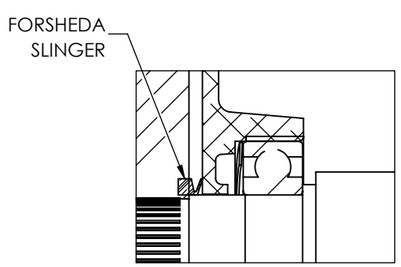

FRONT END DETAIL

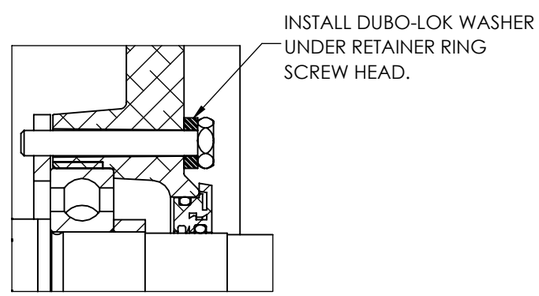

PULLEY END DETAIL

CUSTOMER IS RESPONSIBLE FOR DETERMINING THAT THE PRODUCT WILL PERFORM SUITABLY IN THE INTENDED APPLICATION

REV. DESC: LOAD INOPC CREATED SWD DRG INTO BUS - PACKAGE 37			
REV: G	VERSION: 07	REVISED: 03:25:17 09/19/2019	TDR: 000001120280
MODEL NO. 36LYK606			REF: -
BY: ENSTEK0			B

BALDOR - RELIANCE®

VERT 182-4TC TEFC 36M WD2 (PAINT FREE)

36LYK606