36LYN539

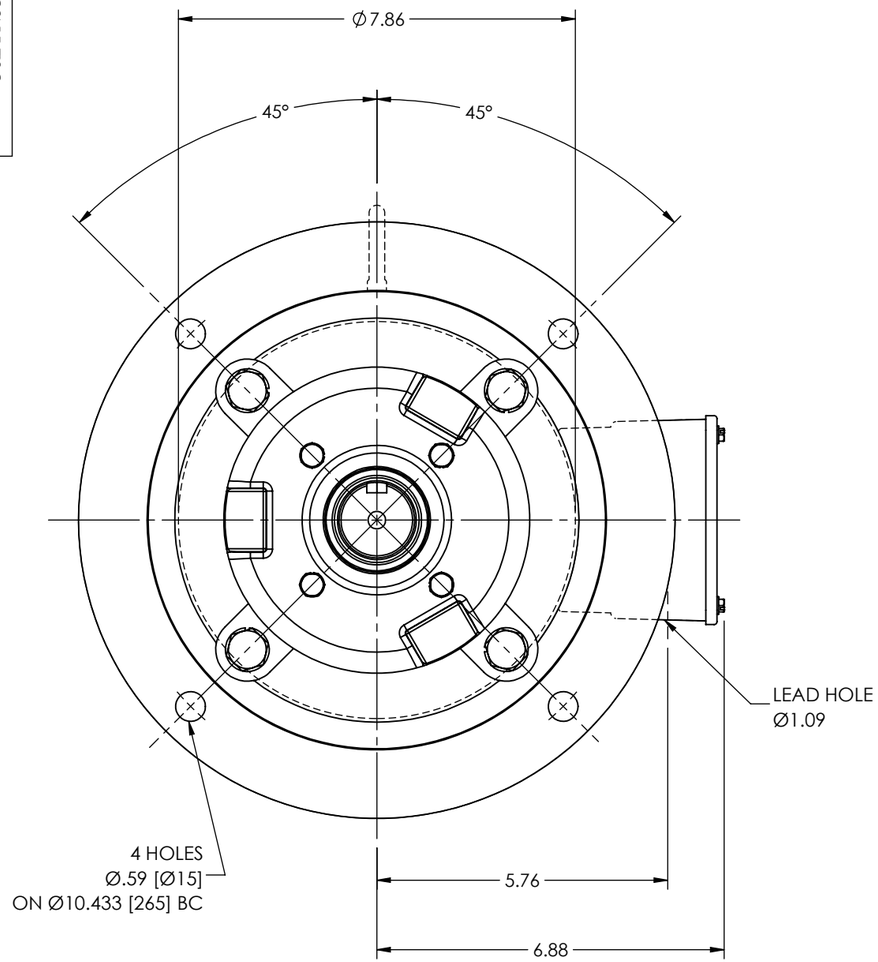

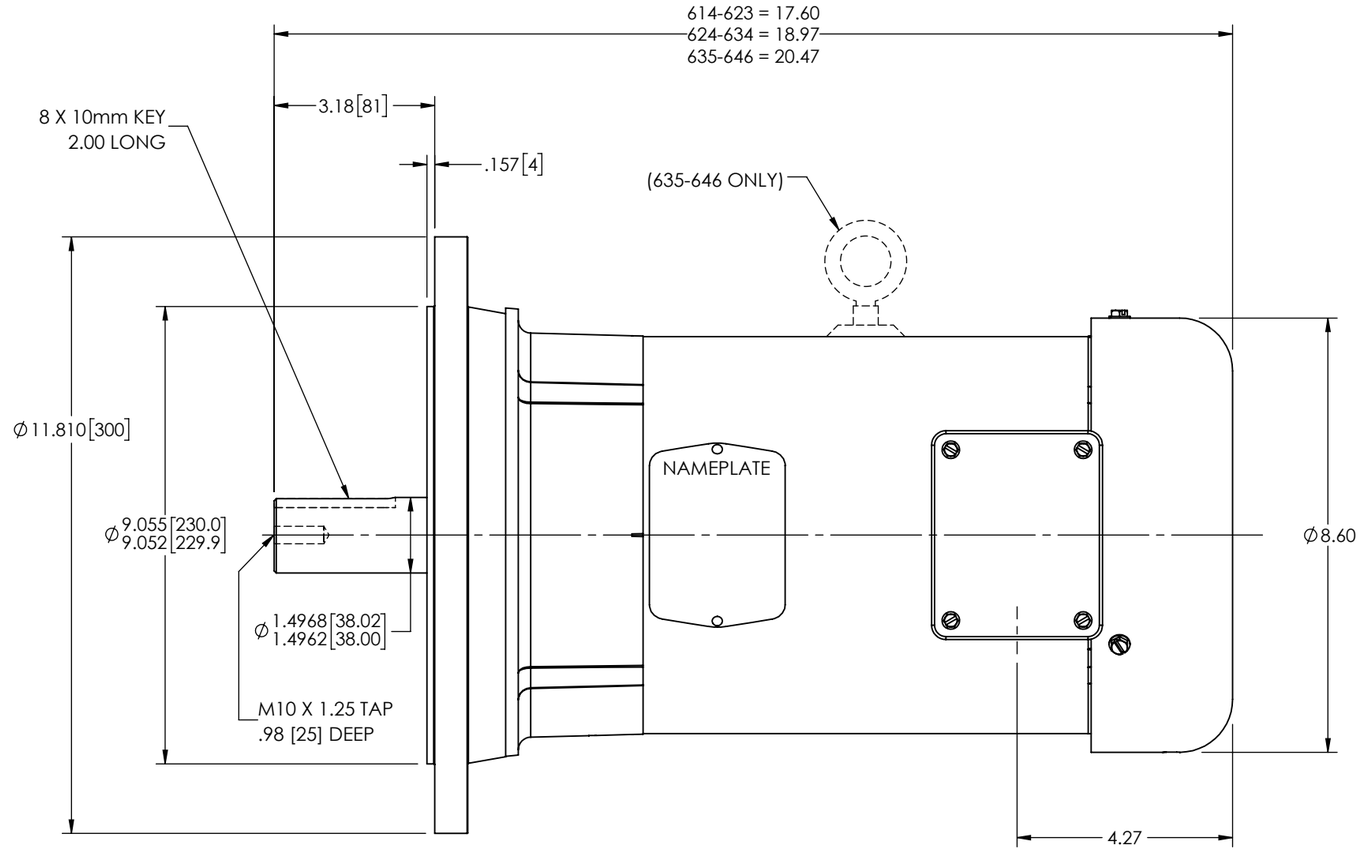

APPLY COAT OF SEALER
TO HOUSING BEFORE
PRESSING SEAL IN.
SEAL MUST BE
PRESSED IN WITH LIP OUT.

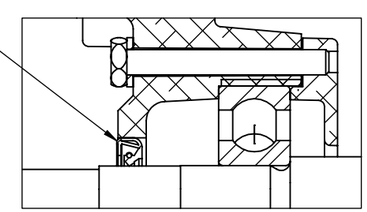

PULLEY END DETAIL

CUSTOMER IS RESPONSIBLE FOR DETERMINING THAT THE PRODUCT WILL PERFORM SUITABLY IN THE INTENDED APPLICATION

REV. DESC: LOAD OF 2D TO 3D CONVERSION FROM INOPC - PKG 37			
REV: A	VERSION: 01	REVISED: 05:27:42 09/23/2019	TDR: 000001120280
MODEL NO. 36LYN539			REF: -
BY: ENBILT0			B

BALDOR - RELIANCE®

VER D132SD-132MD TEFC M B5(F2) W/SEAL

36LYN539