35LYQ176

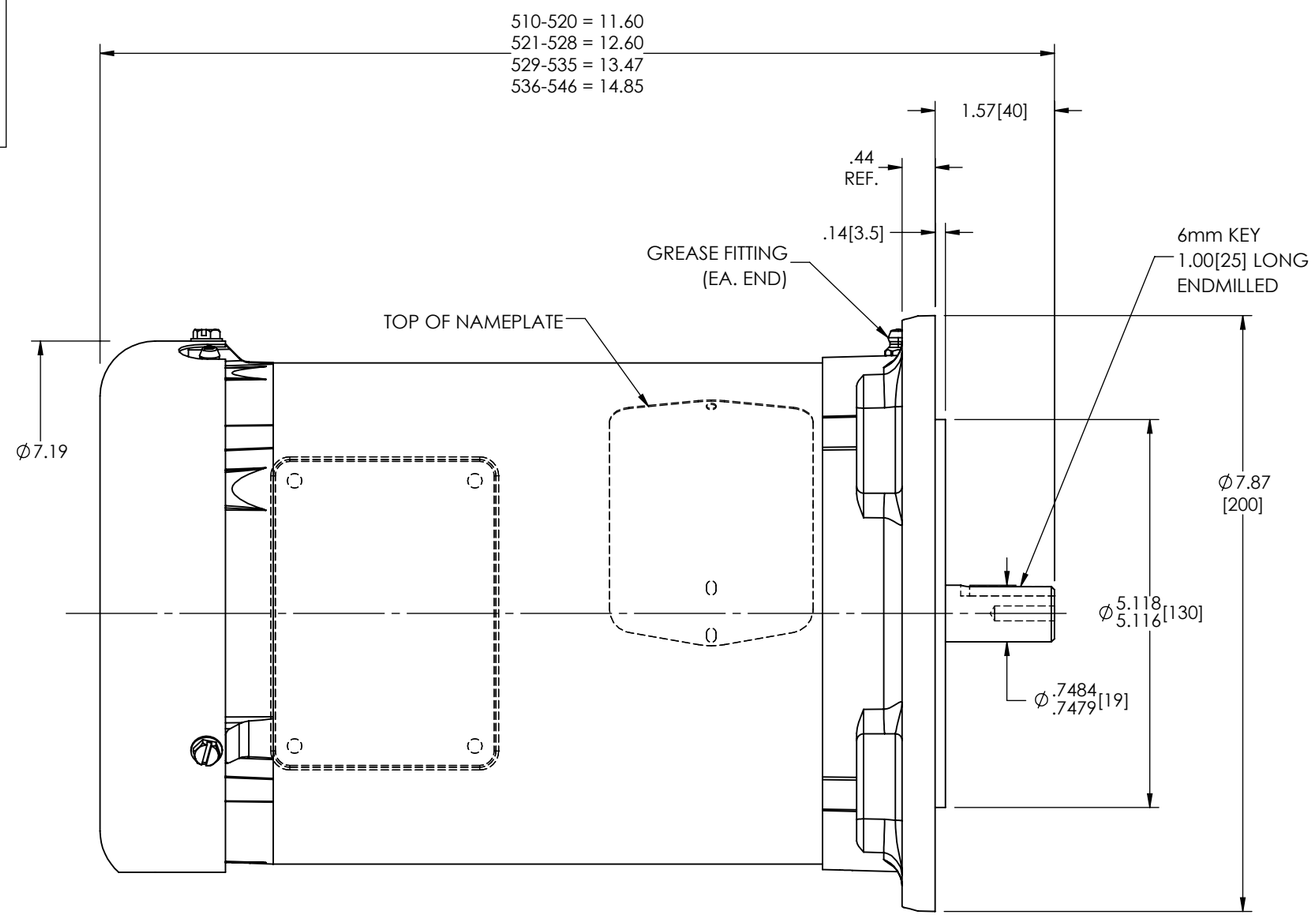

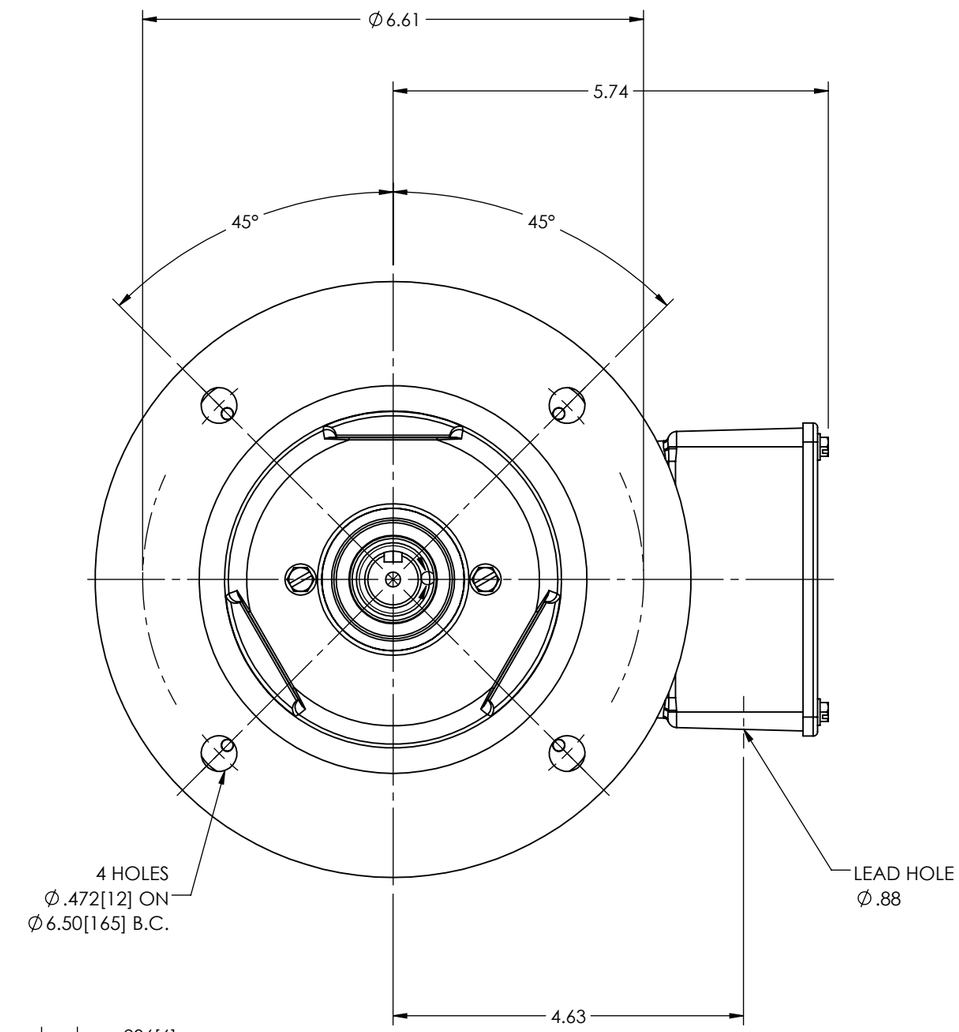

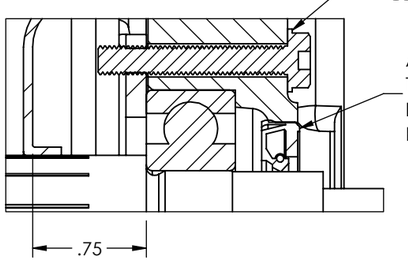

PULLEY END DEATIL

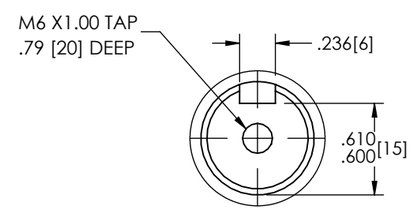

KEYWAY DETAIL

CUSTOMER IS RESPONSIBLE FOR DETERMINING THAT THE PRODUCT WILL PERFORM SUITABLY IN THE INTENDED APPLICATION

REV. DESC: LOAD INOPC CREATED SWD DRG INTO BUS - PACKAGE 15			
REV: E	VERSION: 03	REVISED: 08:34:18 01/23/2019	TDR: 000001096905
MODEL NO. 35LYQ176			REF: -
BY: USBUFRA			B

BALDOR - RELIANCE®

VER D80SD-D80LD TEFC 35M F2 W/SEAL, SHORT STYLE PU.EP
SH 1 of 1

35LYQ176