09LYJ359

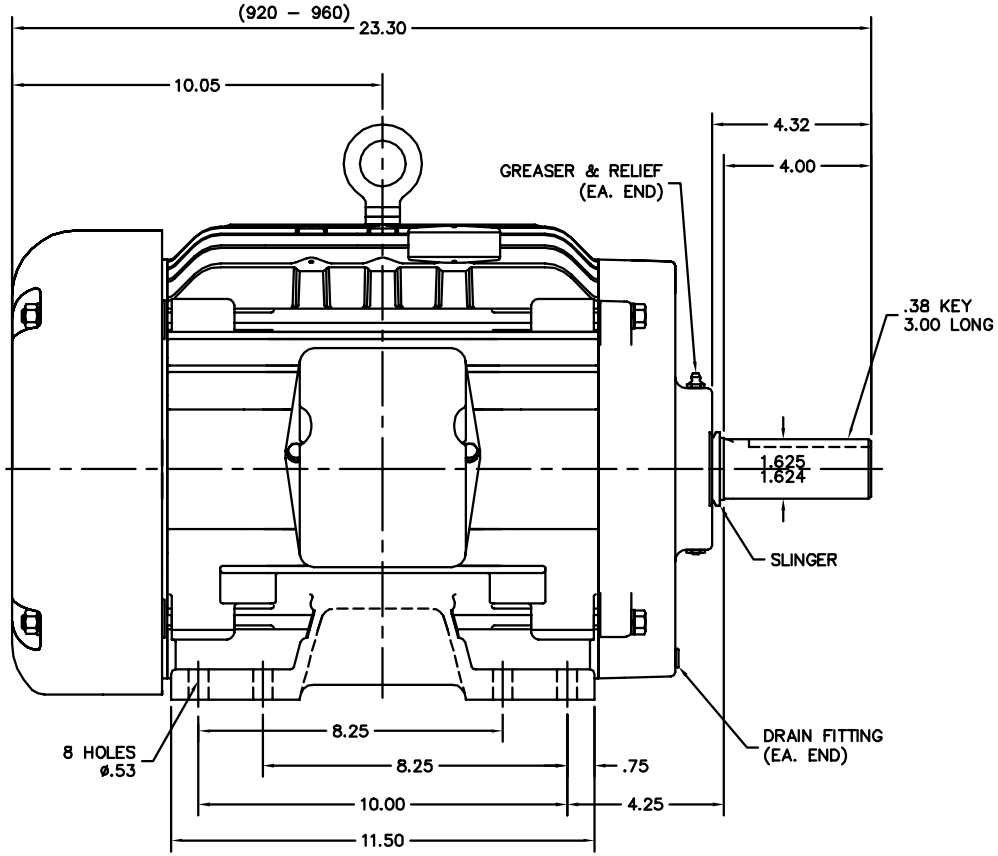

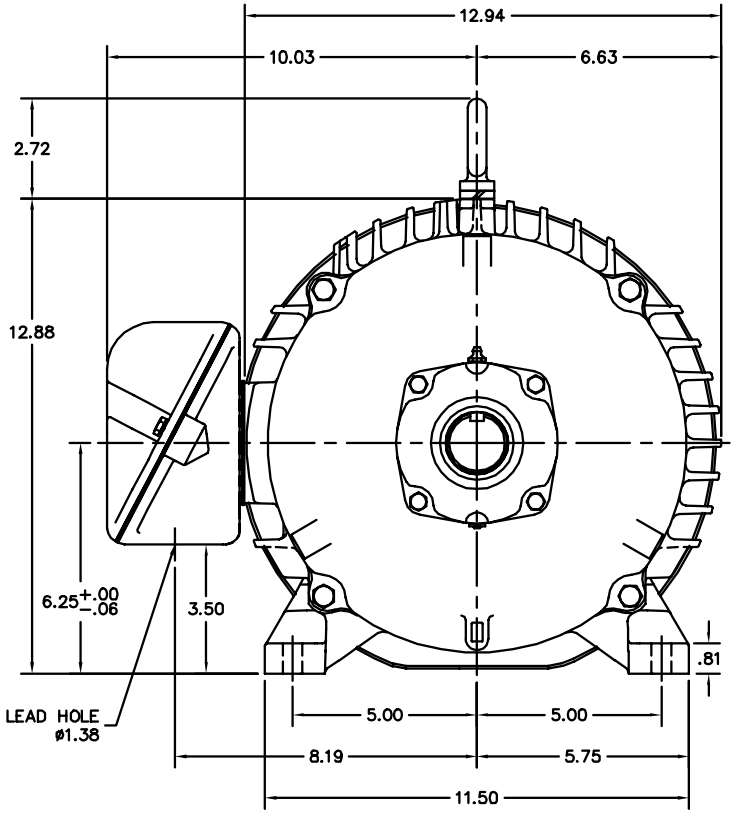

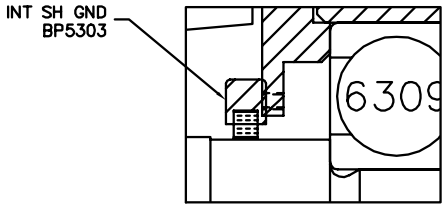

PU BRG RETAINER DETAIL

CUSTOMER IS RESPONSIBLE FOR DETERMINING THAT BALDOR'S PRODUCT WILL PERFORM SUITABLY IN THE INTENDED APPLICATION.

REV. DESC: ADD 60 STACK TO LAYOUT			BALDOR - RELIANCE®
REV. LTR: D	VERSION: 04	TDR: 000001094893	
FILE: \AAA\00174\278	REVISED: 03:53:32 01/10/2019	BY: USSADEL11	HORZ TEFC 254–6T W/INT SH GND
MTL: –			SH 1 of 1

09LYJ359