35LYE972

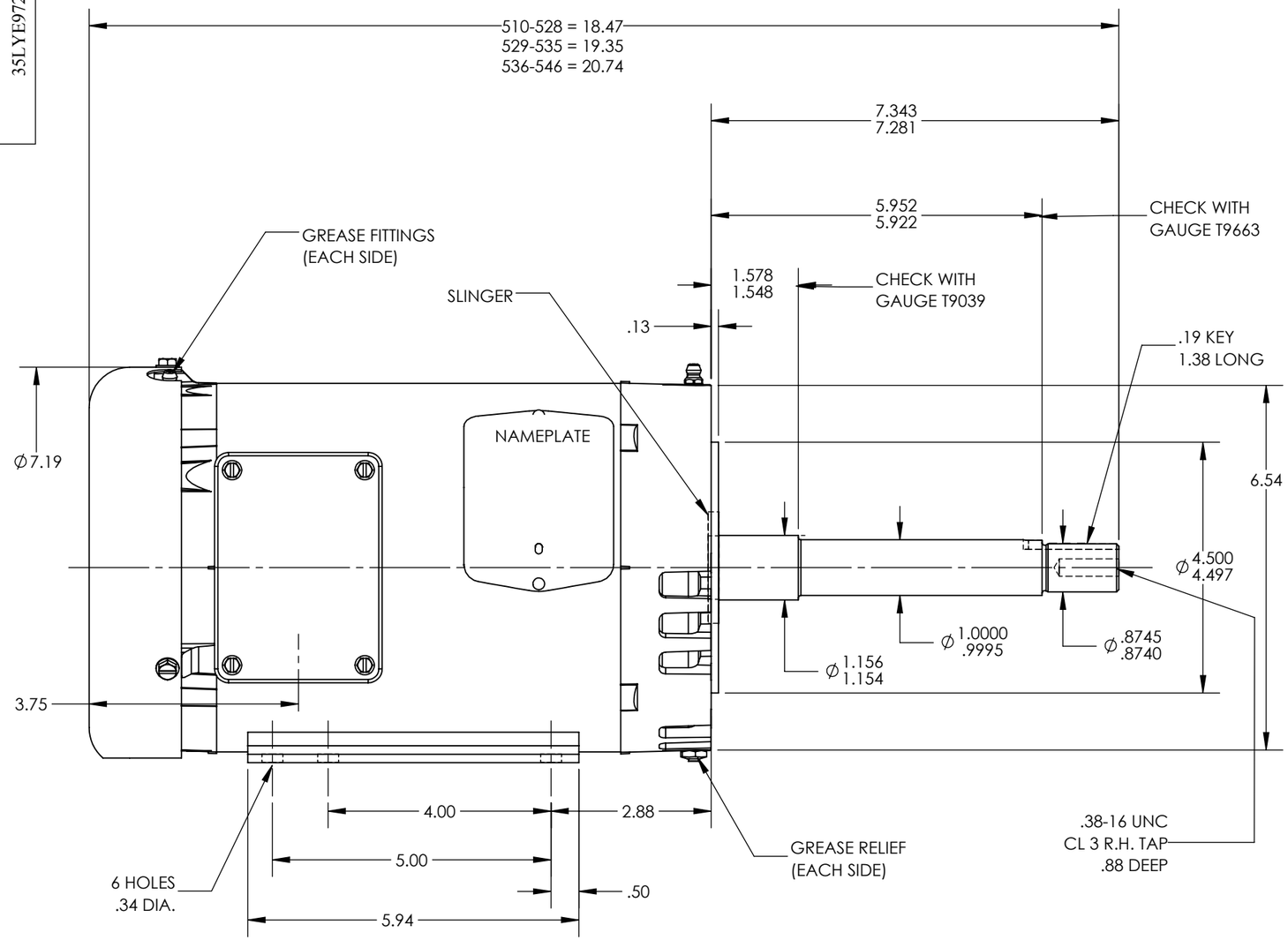

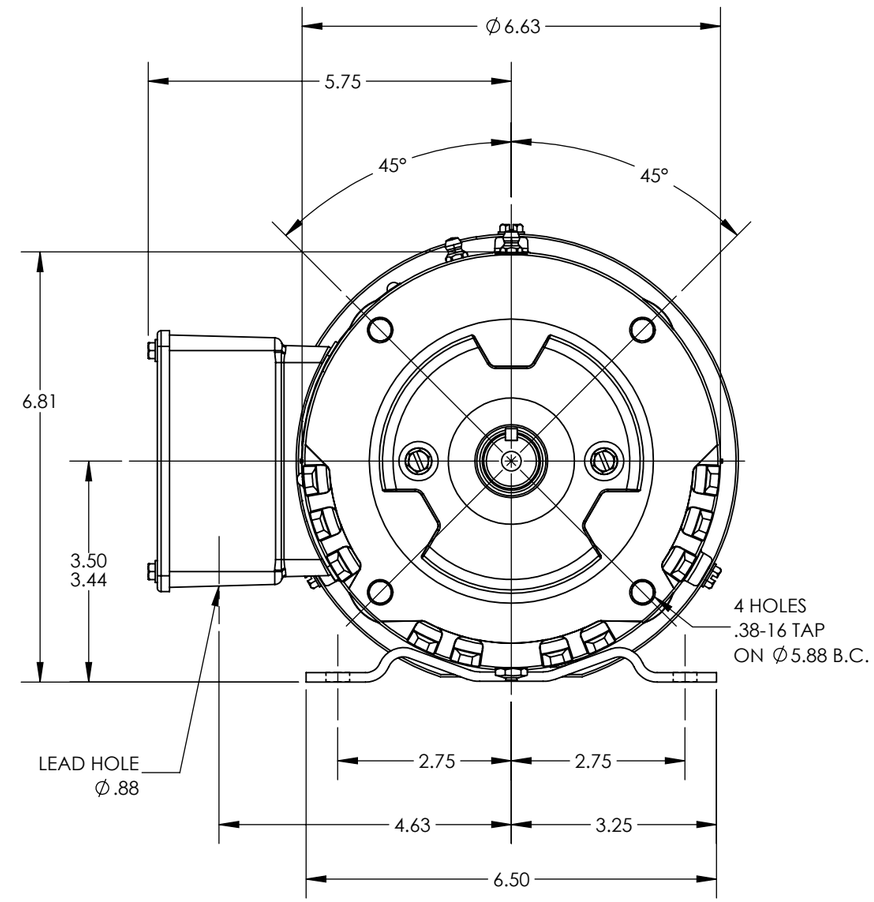

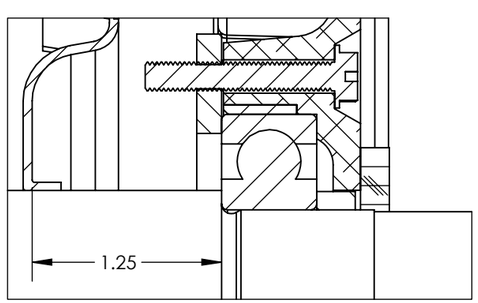

PULLEY END DETAIL

CUSTOMER IS RESPONSIBLE FOR DETERMINING THAT THE PRODUCT WILL PERFORM SUITABLY IN THE INTENDED APPLICATION

REV. DESC: LOADING OF SWD DWG FOR 2D TO 3D CONVERSION PKG 16			
REV: N	VERSION: 03	REVISED: 02:05:09 02/01/2019	TDR: 000001098202
MODEL NO. 35LYE972			REF: -
BY: ENALEM0			B

BALDOR - RELIANCE®

HORZ 143-5JP TEFC 35M
SH 1 of 1

35LYE972