35LYM019

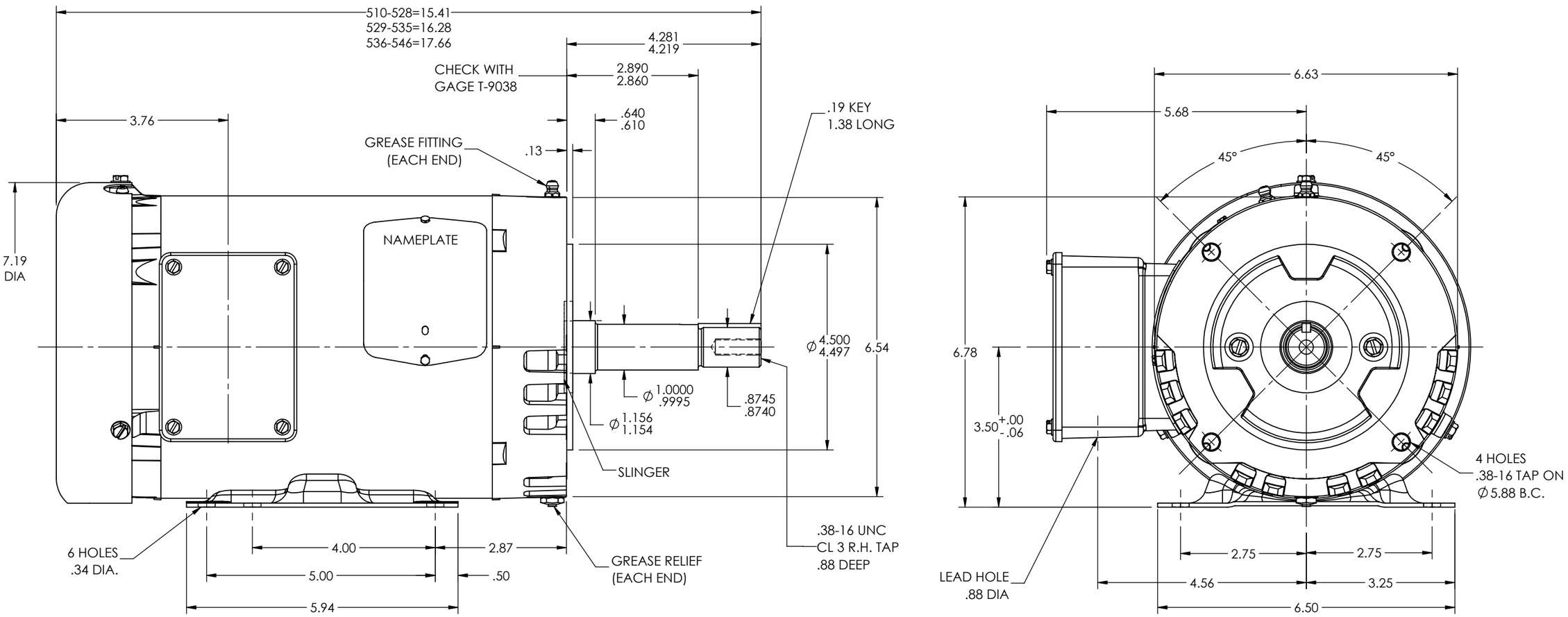

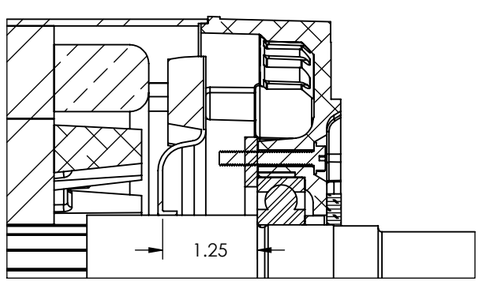

PULLEY END DETAIL

CUSTOMER IS RESPONSIBLE FOR DETERMINING THAT THE PRODUCT WILL PERFORM SUITABLY IN THE INTENDED APPLICATION

REV. DESC: UPDATE TITLE BLOCK TO SHOW LAYOUT NUMBER			
REV: T	VERSION: 05	REVISED: 04:08:40 01/10/2019	TDR: 000001095542
MODEL NO. 35LYM019			REF: -
BY: USBUFRA			B

BALDOR - RELIANCE®

STD HORZ 143-5JM TEFC 35M

35LYM019