35LYF084

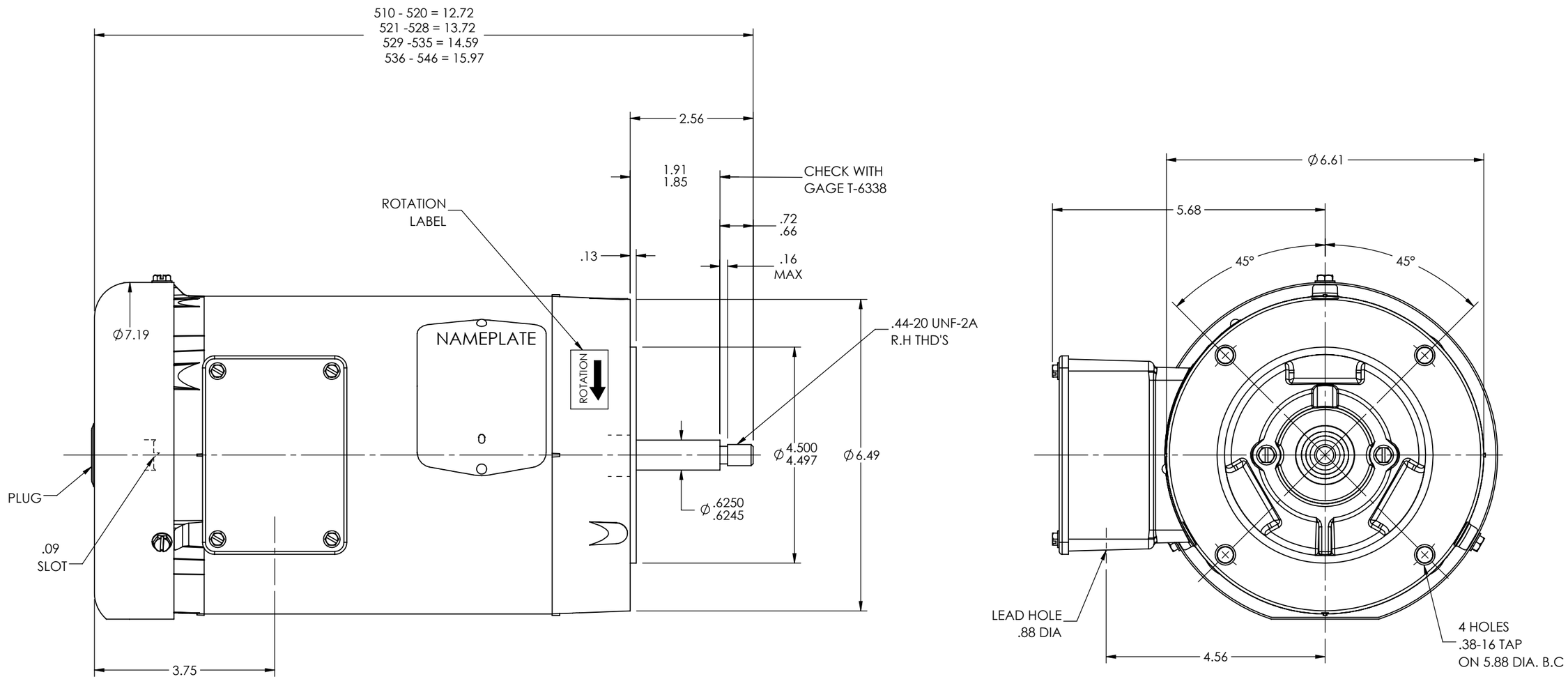

CUSTOMER IS RESPONSIBLE FOR DETERMINING THAT BALDOR'S PRODUCT WILL PERFORM SUITABLY IN THE INTENDED APPLICATION.

REV. DESC: LOADING OF SWD DWG FOR 2D TO 3D CONVERSION			
REV: U	VERSION: 05	REVISED: 08:41:03 11/01/2018	TDR: 000001089746
MODEL NO. 35LYF084			REF: -
BY: ENALEM0	Material: -		B

BALDOR - RELIANCE®

STD VERT 56J TEFC 35M

SH 1 of 1

35LYF084