35LYE2678

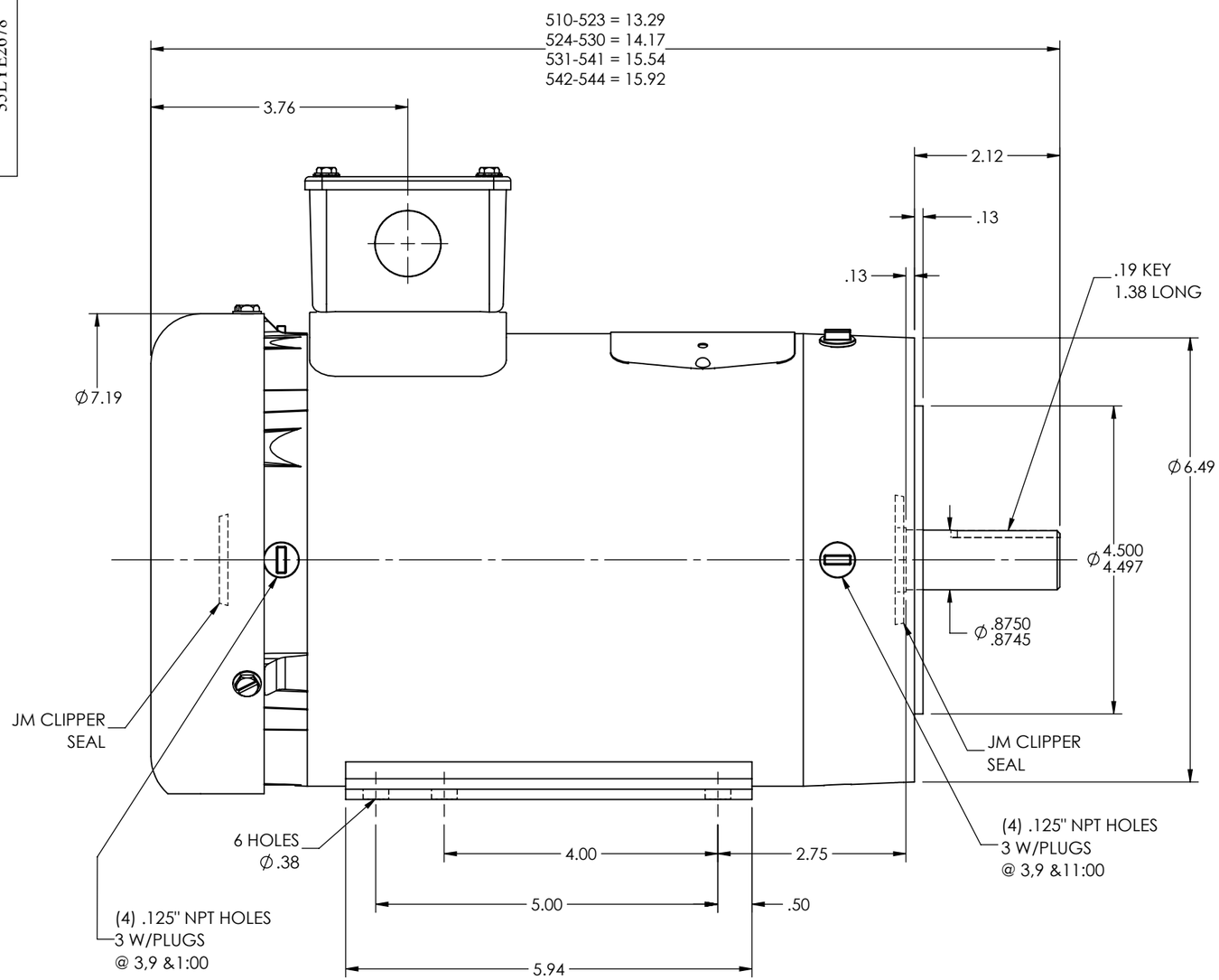

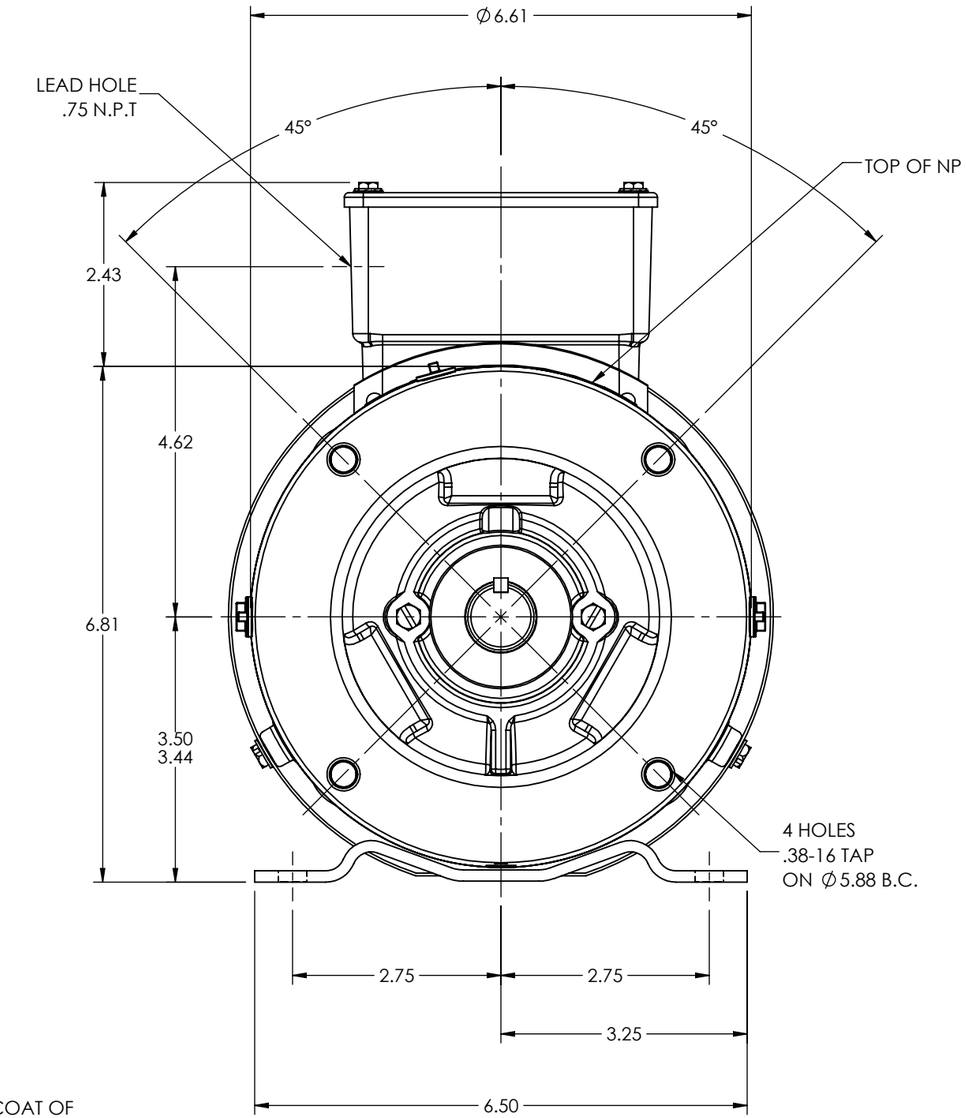

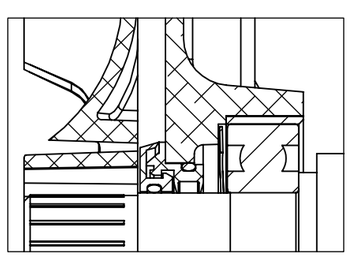

FRONT END DETAIL

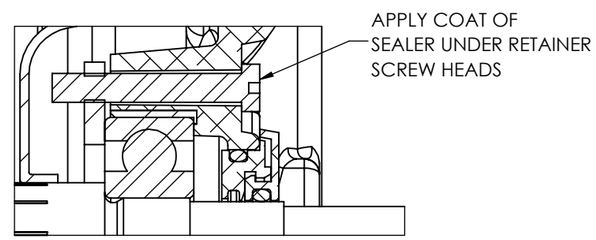

PULLEY END DETAIL

CUSTOMER IS RESPONSIBLE FOR DETERMINING THAT THE PRODUCT WILL PERFORM SUITABLY IN THE INTENDED APPLICATION

REV. DESC: LOADING OF SWD DWG FOR 2D TO 3D CONVERSION - PKG17			
REV: E	VERSION: 05	REVISED: 11:53:25 02/08/2019	TDR: 000001098865
MODEL NO. 35LYE2678			REF: -
BY: ENSTEK0			B

BALDOR - RELIANCE®

HOR 143-5TC TEFC M F3 WD FOR ENCAP W/JM CLIPPER SEAL
SH 1 of 1

35LYE2678