35LYV814

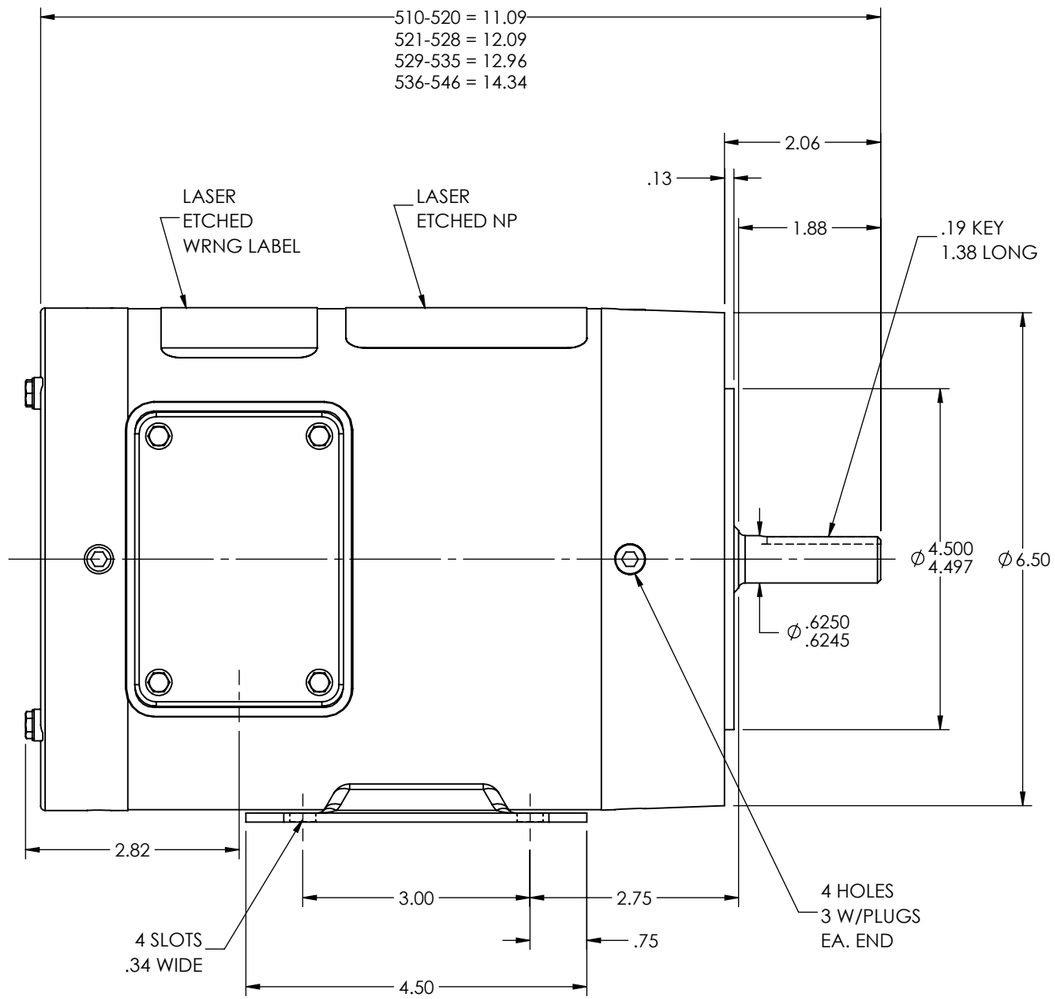

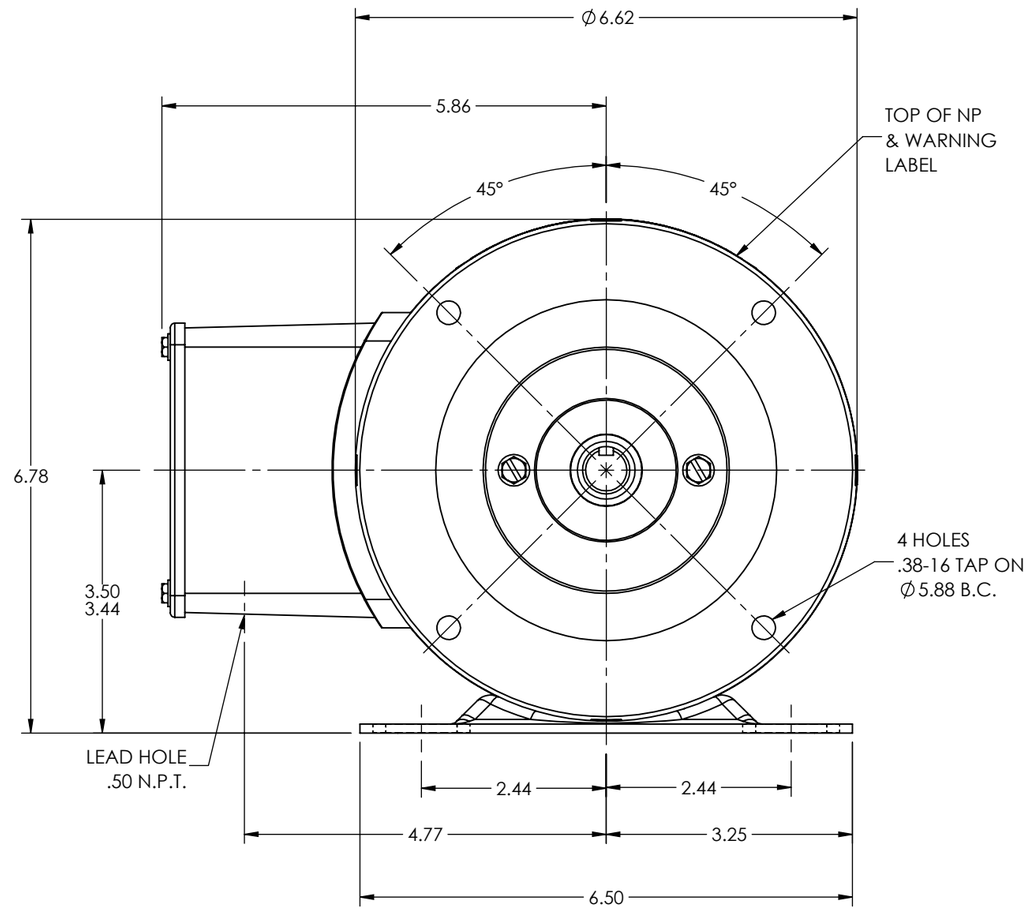

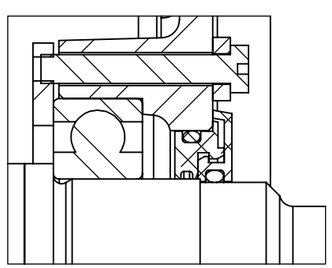

PULLEY END DETAIL

CUSTOMER IS RESPONSIBLE FOR DETERMINING THAT THE PRODUCT WILL PERFORM SUITABLY IN THE INTENDED APPLICATION

REV. DESC: LOAD INOPC CREATED SWD DRG INTO BUS - PACKAGE 13			
REV: A	VERSION: 01	REVISED: 01:27:07 12/20/2018	TDR: 000001094435
MODEL NO. 35LYV814			REF: -
BY: USBUFRA			B

BALDOR - RELIANCE®

HOR 56C TENV 35M WD4 W/LOCKED PU BRG & LASER ETCHED BAND
SH 1 of 1

35LYV814