35LYS593

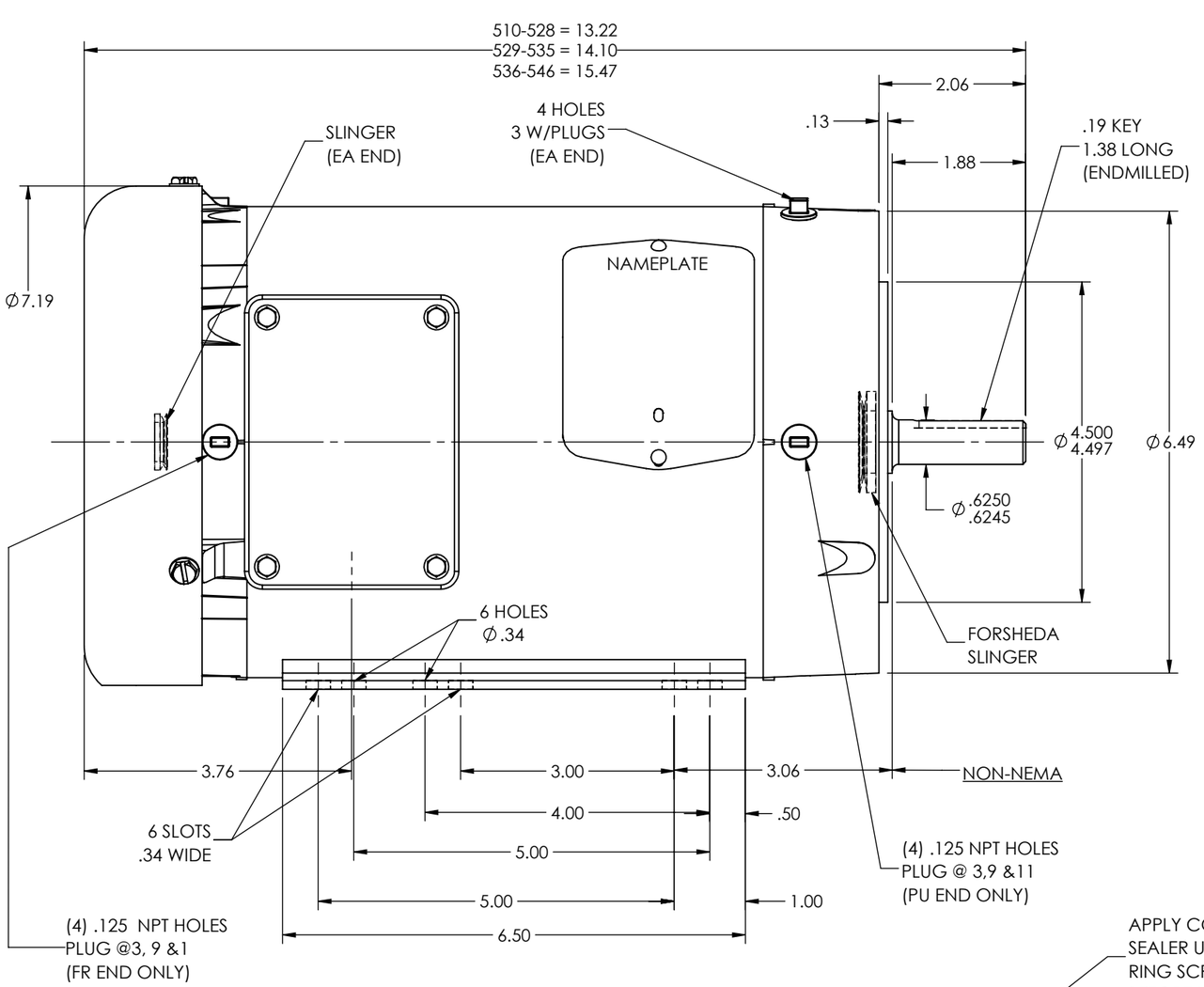

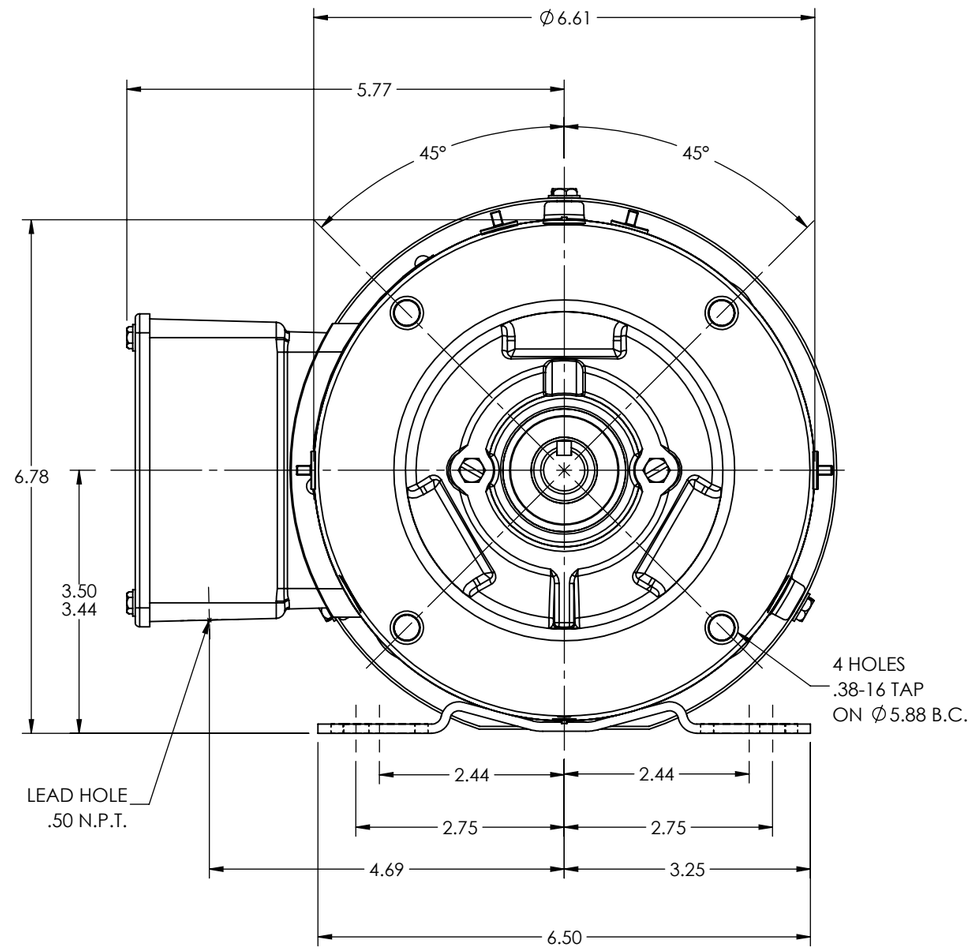

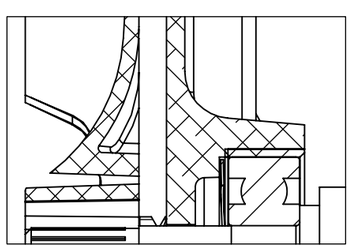

FRONT END DETAIL

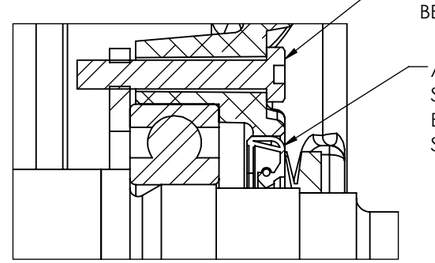

PULLEY END DETAIL

CUSTOMER IS RESPONSIBLE FOR DETERMINING THAT THE PRODUCT WILL PERFORM SUITABLY IN THE INTENDED APPLICATION

REV. DESC: LOAD INOPC CREATED SWD DRG INTO BUS - PACKAGE 13			
REV: G	VERSION: 07	REVISED: 09:37:17 12/20/2018	TDR: 000001094435
MODEL NO. 35LYS593			REF: -
BY: USBUFRA			B

BALDOR - RELIANCE®

STD HORZ 56HCY TEFC 35M WASH DOWN (SP 9)
SH 1 of 1

35LYS593