35LYSS592

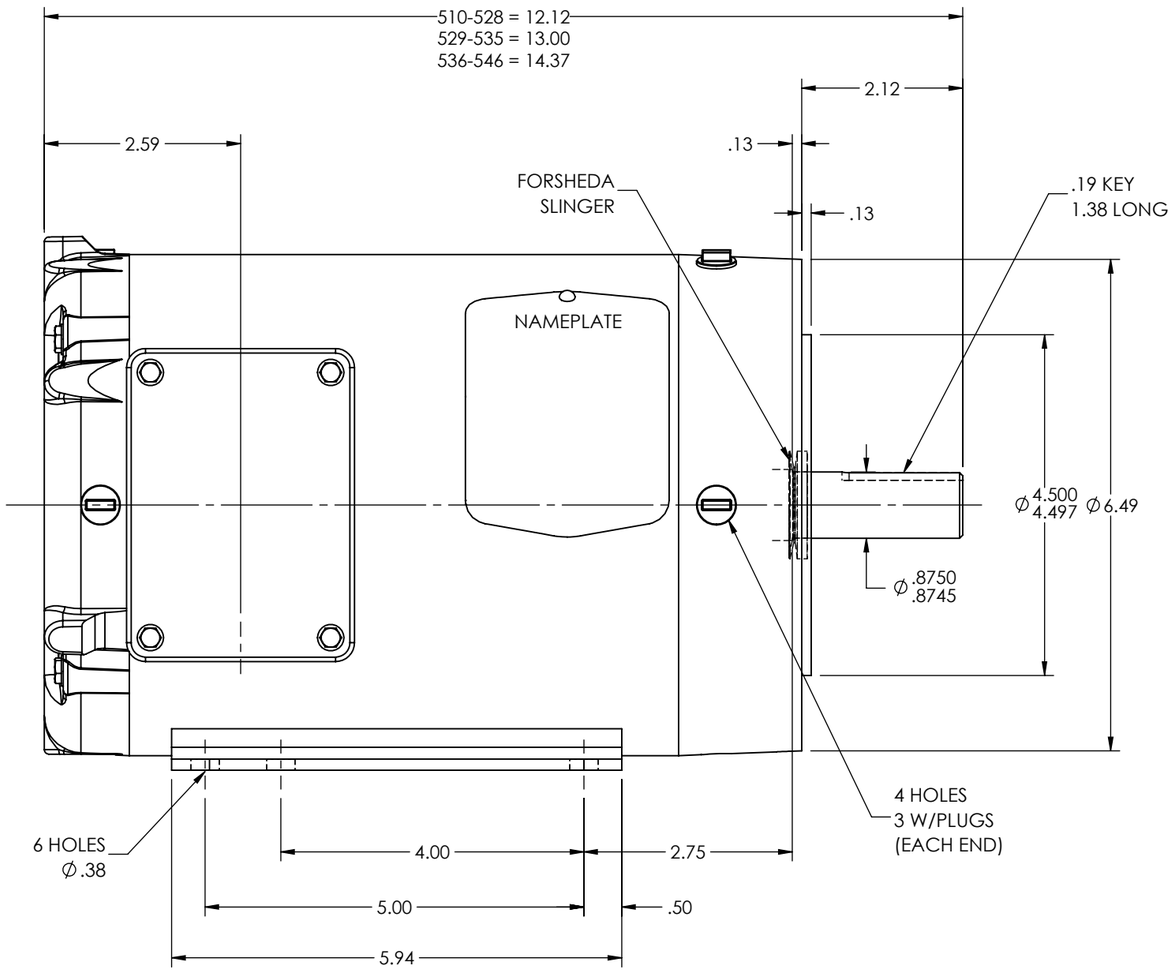

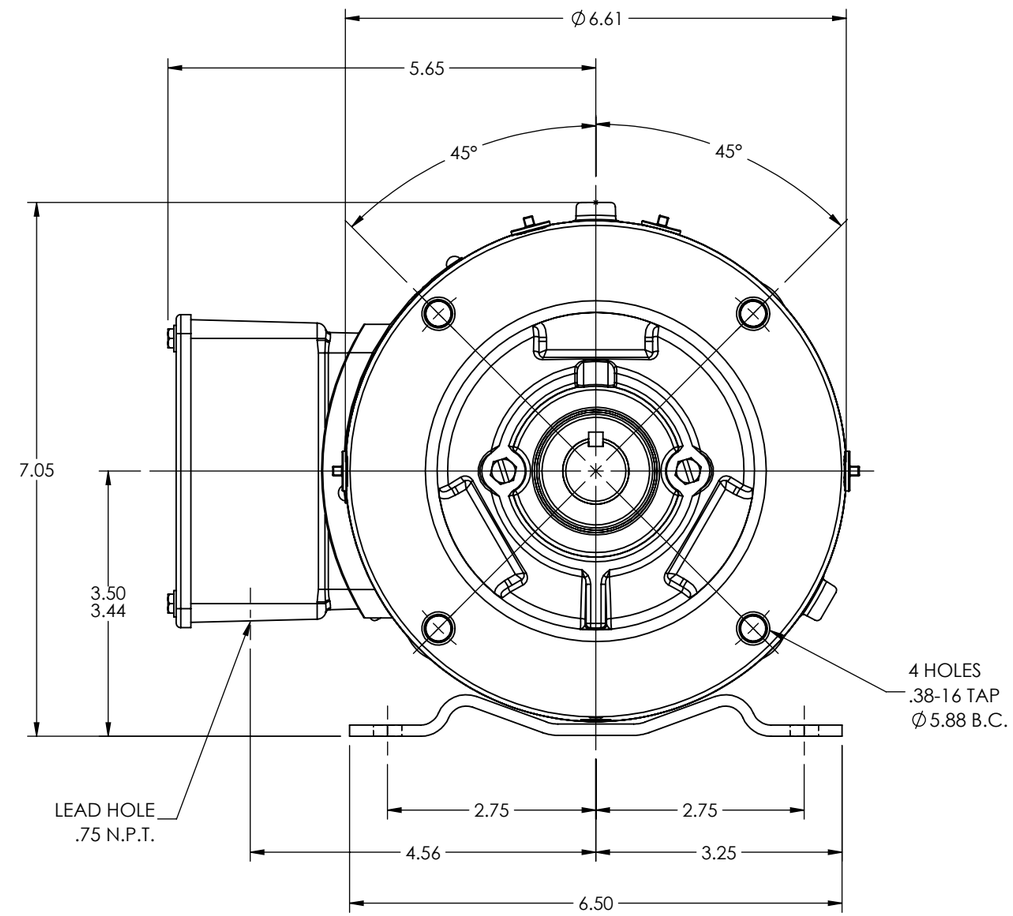

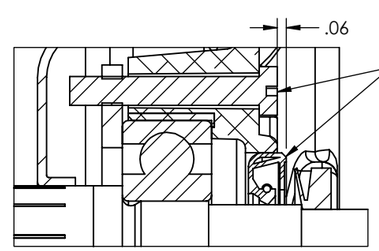

OMIT LOCK-WASHERS &
APPLY SEALER UNDER
BEARING RETAINER SCREW HEADS
& HOUSING O.D. BEFORE
PRESSING IN SEAL

PULLEY END DETAIL

CUSTOMER IS RESPONSIBLE FOR DETERMINING THAT THE PRODUCT WILL PERFORM SUITABLY IN THE INTENDED APPLICATION

REV. DESC: LOADING OF SWD DWG FOR 2D TO 3D CONVERSION - PKG12			
REV: B	VERSION: 02	REVISED: 04:48:21 12/11/2018	TDR: 000001093440
MODEL NO. 35LYSS592			REF: -
BY: ENALEM0			B

BALDOR - RELIANCE®

STD HORZ 143-5TC TENV 35M WD (S/P #9) W/.75 NPT LEAD HOLE
SH 1 of 1

35LYSS592