35LYSS621

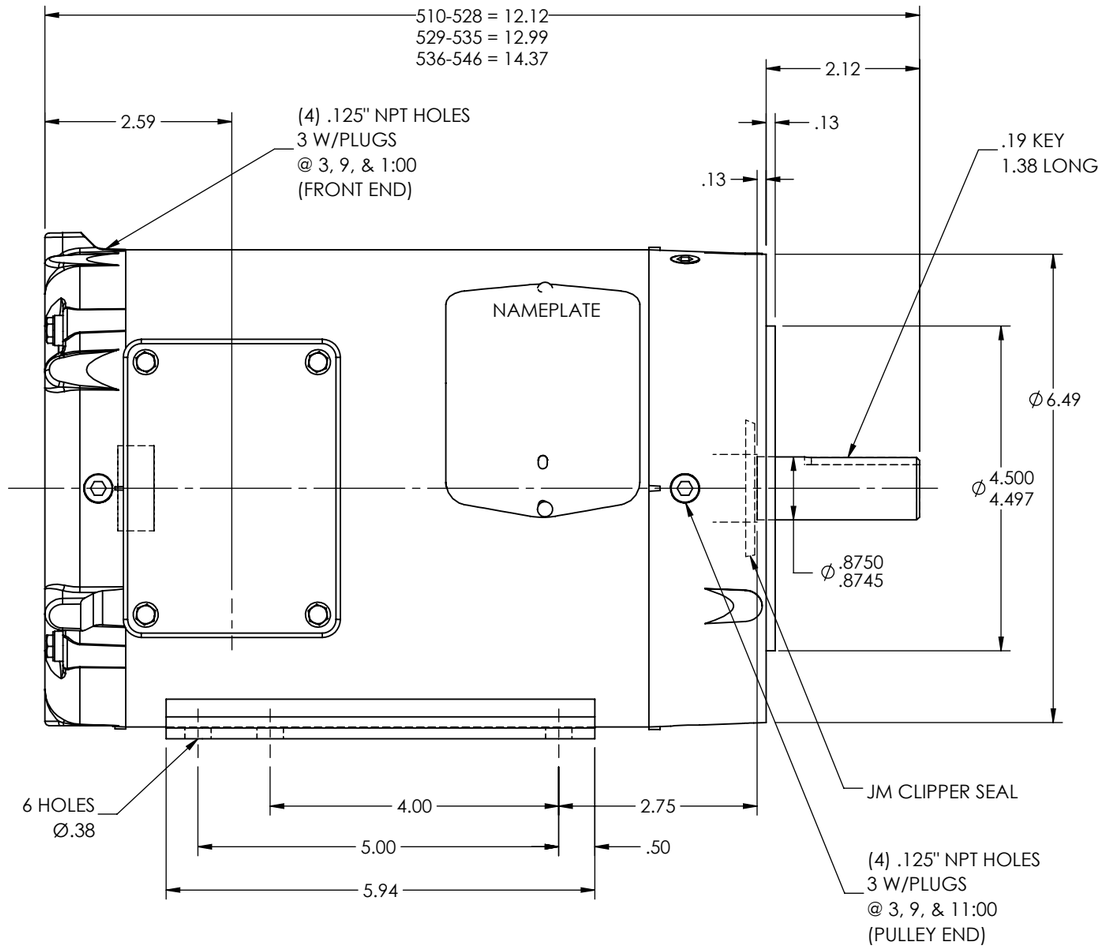

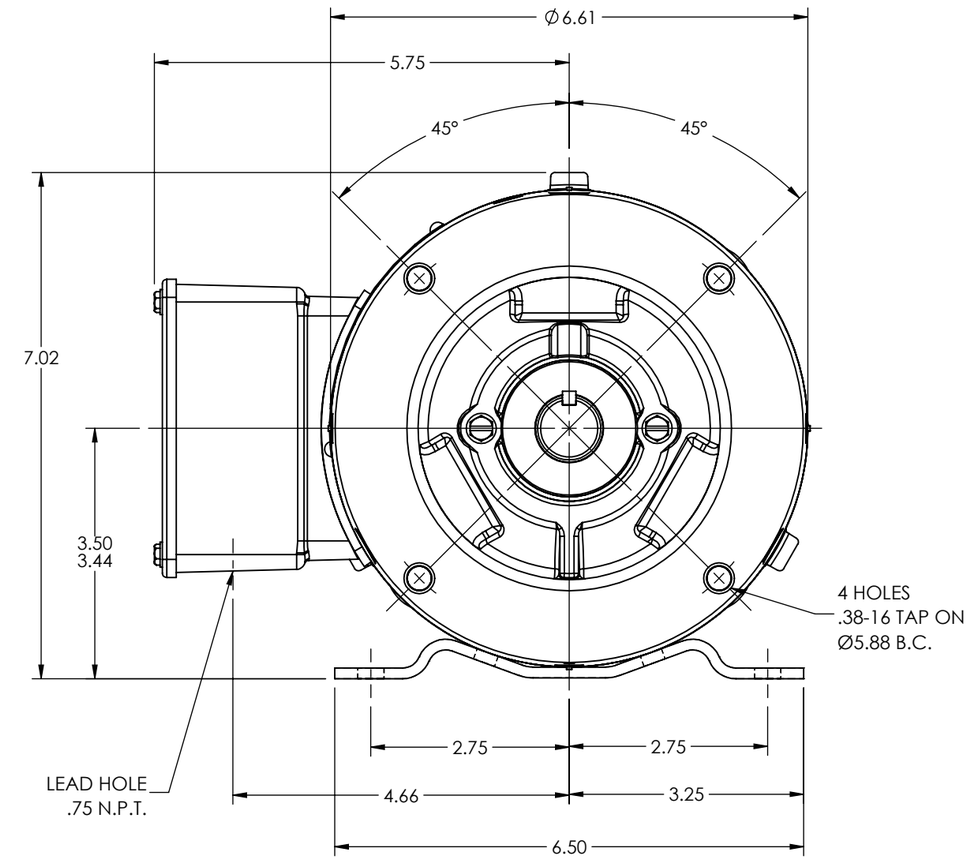

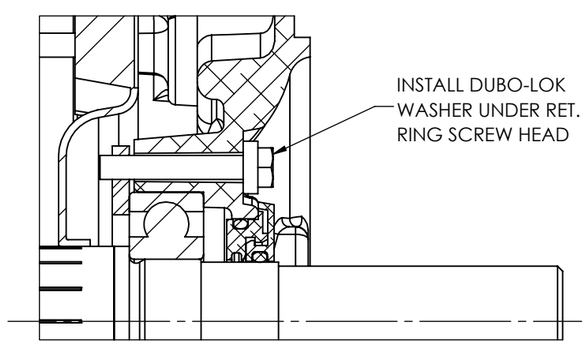

PULLEY END DETAIL

CUSTOMER IS RESPONSIBLE FOR DETERMINING THAT THE PRODUCT WILL PERFORM SUITABLY IN THE INTENDED APPLICATION

REV. DESC: LOADING OF SWD DWG FOR 2D TO 3D CONVERSION PKG 15			
REV: C	VERSION: 03	REVISED: 01:30:11 01/21/2019	TDR: 000001096905
MODEL NO. 35LYSS621			REF: -
BY: ENALEM0			B

BALDOR - RELIANCE®

HORZ 143-5TC TENV 35M WD2 (PAINT FREE) W/.75 NPT LEAD HOLE
SH 1 of 1

35LYSS621