617428-019

DUTY MASTER ALTERNATING CURRENT MOTORS

SQUIRREL-CAGE INDUCTION
CAST IRON CONSTRUCTION

ENCLOSURE: TOTALLY ENCLOSED
MOUNTING: FOOT

FRAMES 364TC-365TC

COOLING: FAN COOLED

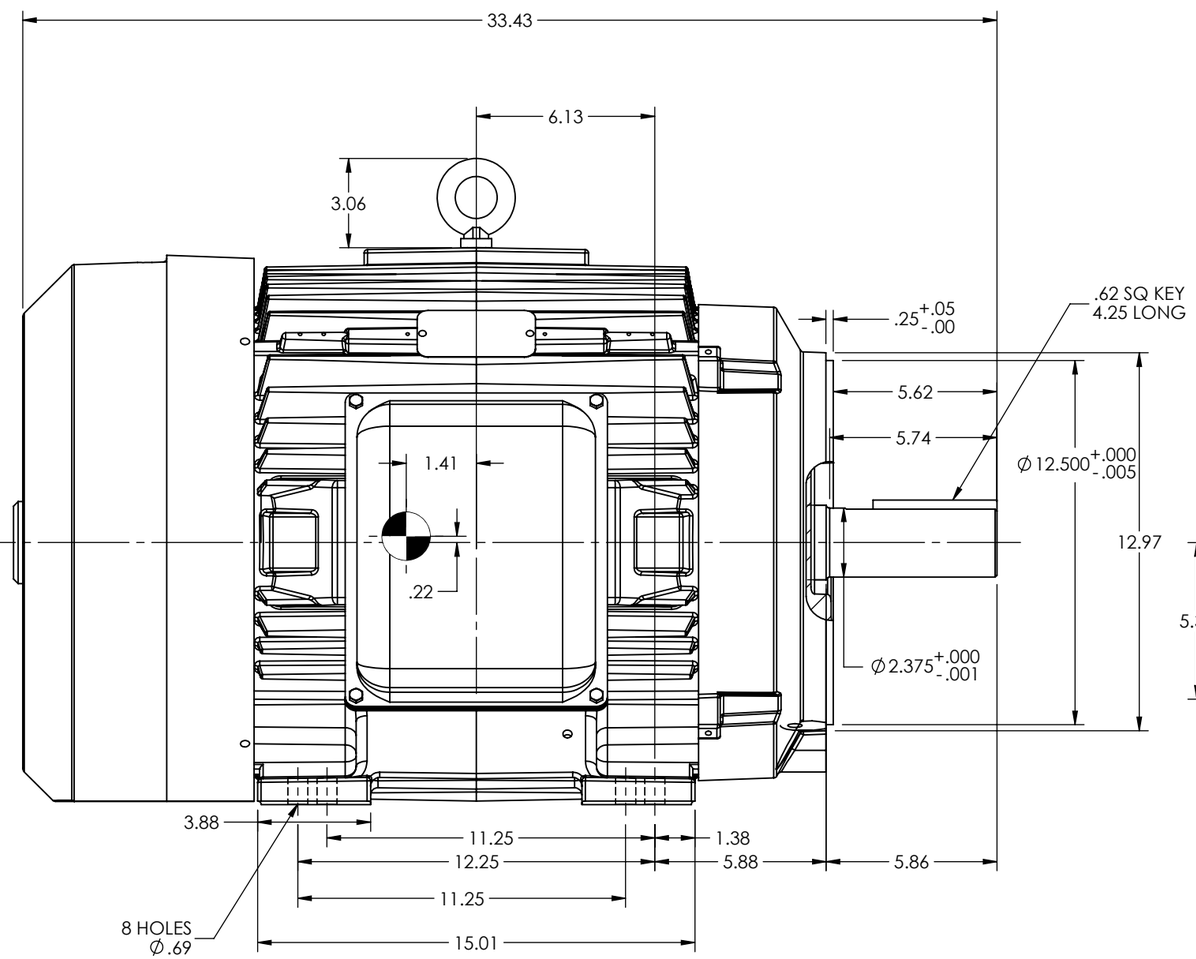

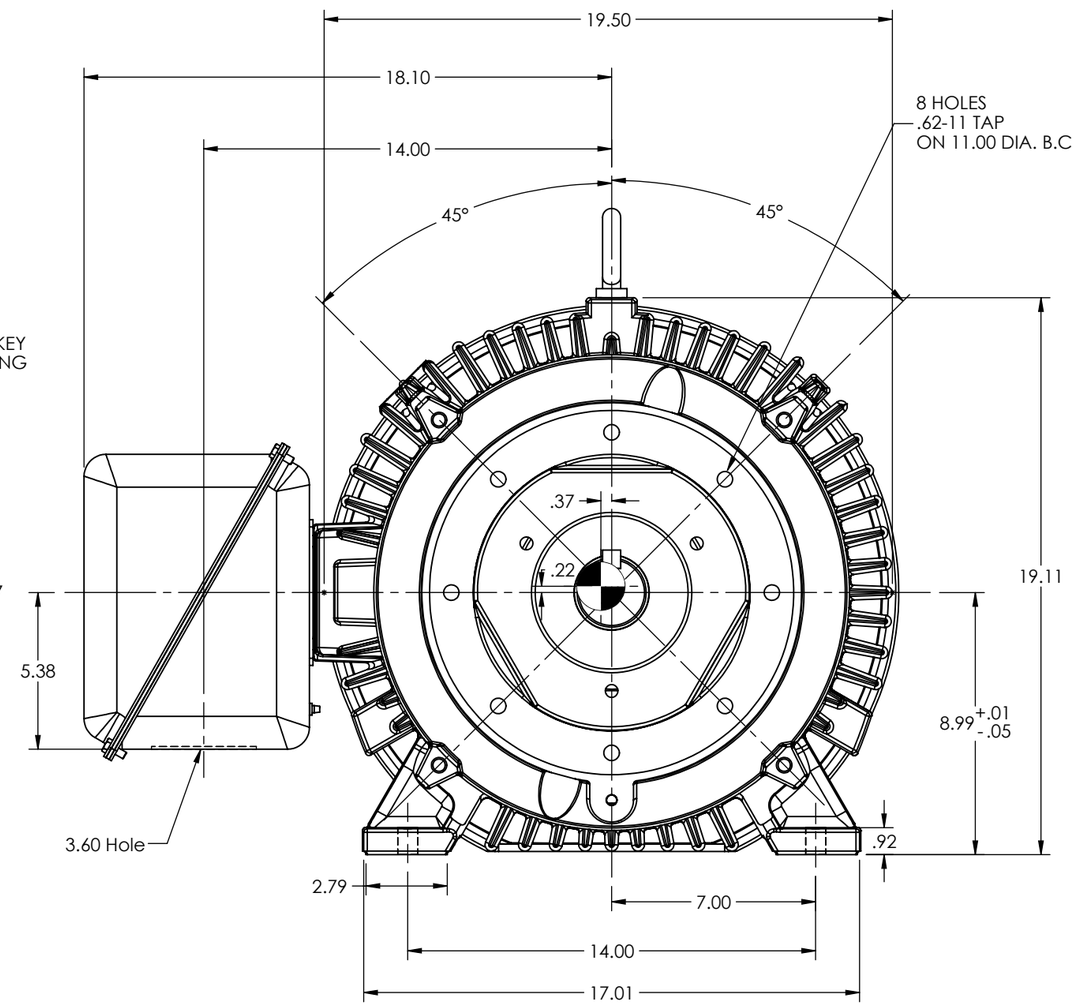

MAXIMUM PERMISSIBLE SHAFT RUNOUT WHEN MEASURED AT END OF STD. SHAFT EXTENSION IS .002 T.I.R. UP TO AND INCLUDING 1.625 DIA AND .003 T.I.R. 1.625 DIA. TO 5 INCH DIA.

WEIGHT (LBS): 364TC = 815
365TC = 855

MOTOR WEIGHTS MAY VARY BY 15% DEPENDING UPON RATING.

CENTER OF GRAVITY WITH X & Y VARY ± 1.0 INCH FROM CENTER.

CUSTOMER IS RESPONSIBLE FOR DETERMINING THAT BALDOR'S PRODUCT WILL PERFORM SUITABLY IN THE INTENDED APPLICATION

REV. DESC: FIX COG			
REV: D	VERSION: 04	REVISED: 09:34:56 05/28/2019	TDR: 000001109340
MODEL NO. 617428-019			REF:
BY: RAGJSS1			B

BALDOR

DIM SHEET 364-5TC TEFC (611740-003-SH1)

617428-019