06LYF057

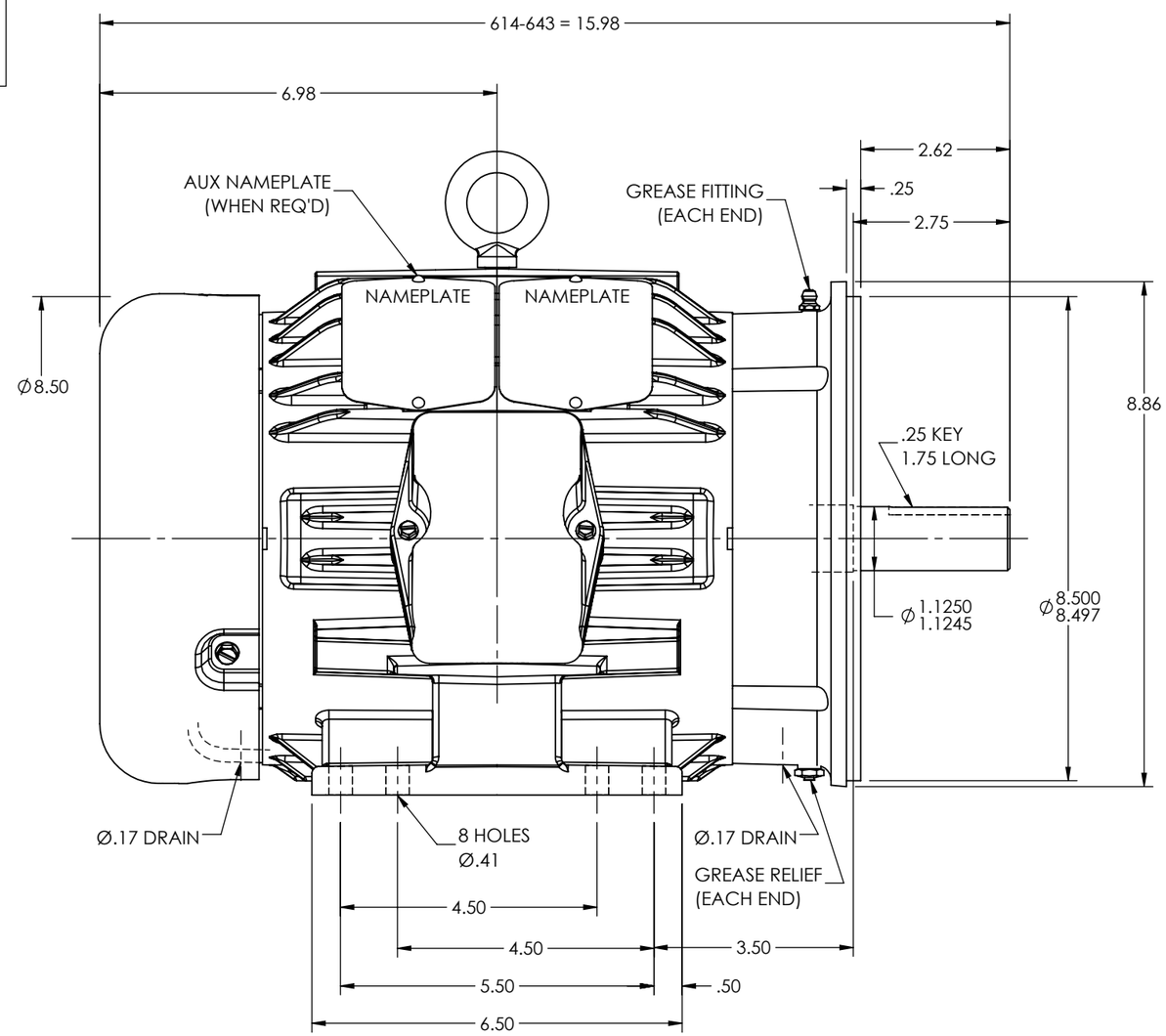

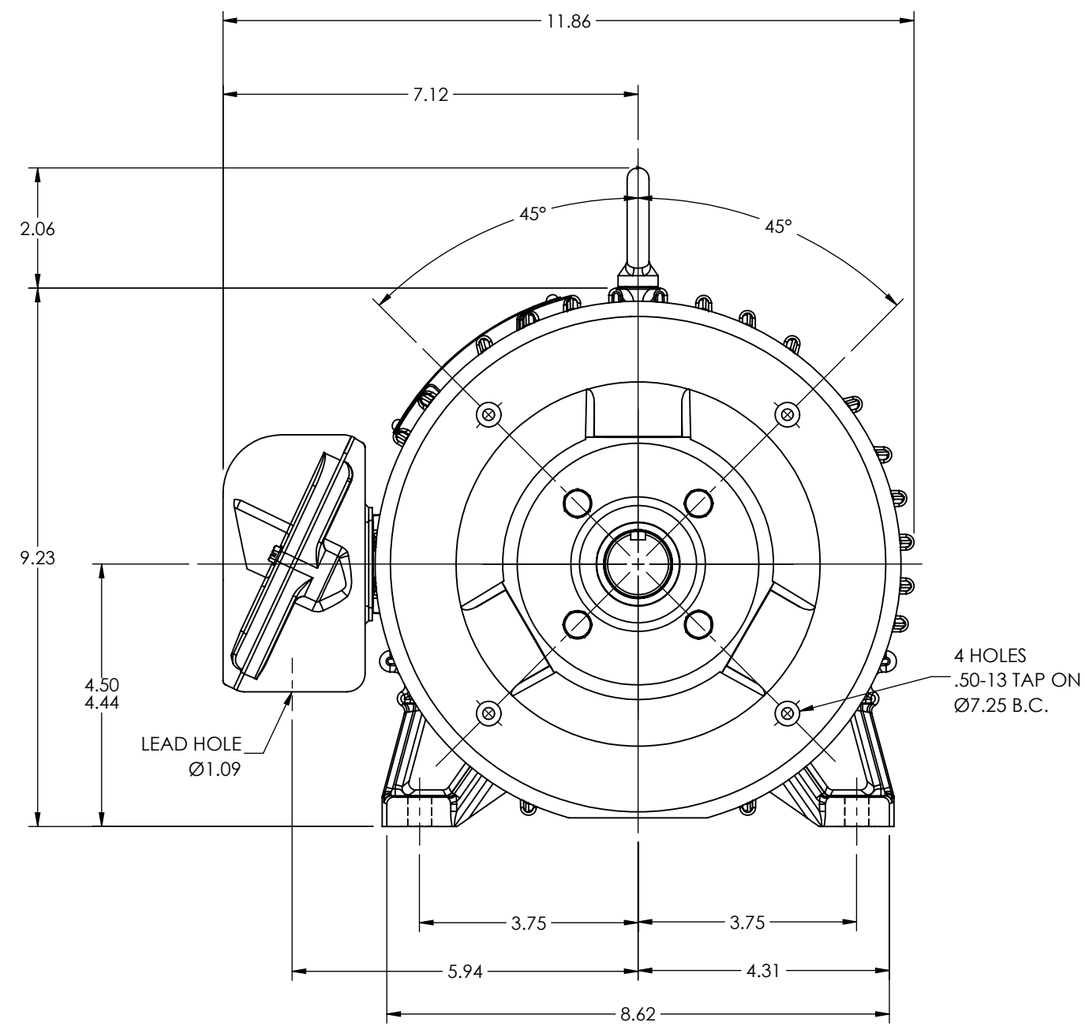

CUSTOMER IS RESPONSIBLE FOR DETERMINING THAT THE PRODUCT WILL PERFORM SUITABLY IN THE INTENDED APPLICATION

REV. DESC: LOADING OF INOPC SWD MODEL & DRAWING FOR PKG 37			
REV: J	VERSION: 04	REVISED: 09:28:21 09/19/2019	TDR: 000001120280
MODEL NO. 06LYF057			REF: -
BY: ENALEM0			B

BALDOR - RELIANCE®

HORZ 182-4TC 306M TEFC (HI-EFF)

06LYF057