35LYAA002

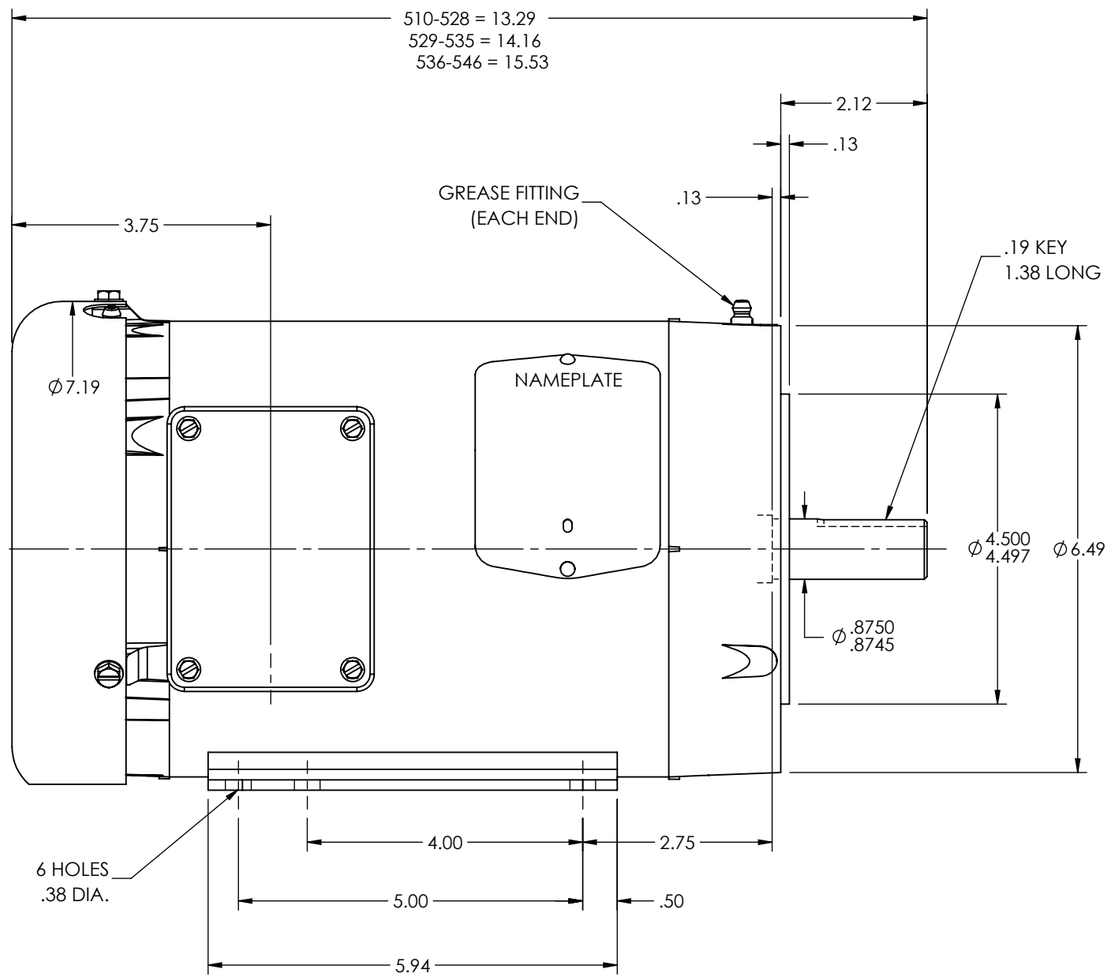

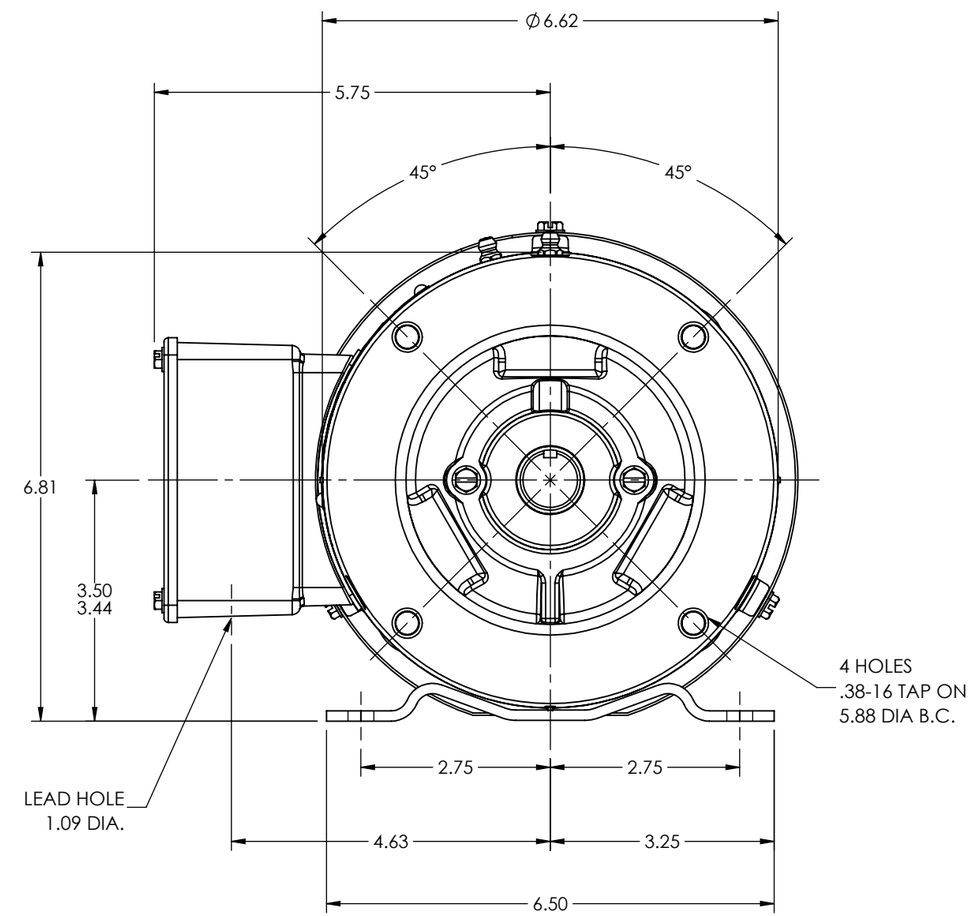

CUSTOMER IS RESPONSIBLE FOR DETERMINING THAT BALDOR'S PRODUCT WILL PERFORM SUITABLY IN THE INTENDED APPLICATION.

REV. DESC: LOADING OF SWD DWG FOR 2D TO 3D CONVERSION			
REV: C	VERSION: 03	REVISED: 02:21:16 10/31/2018	TDR: 000001089746
MODEL NO: 35LYAA002			REF: -
BY: ENALEM0	Material: -		B

BALDOR - RELIANCE®

STD HORZ 143-5TC TEFC 35M W/ 1.09 DIA. LEAD HOLE
SH 1 of 1

35LYAA002