34K048

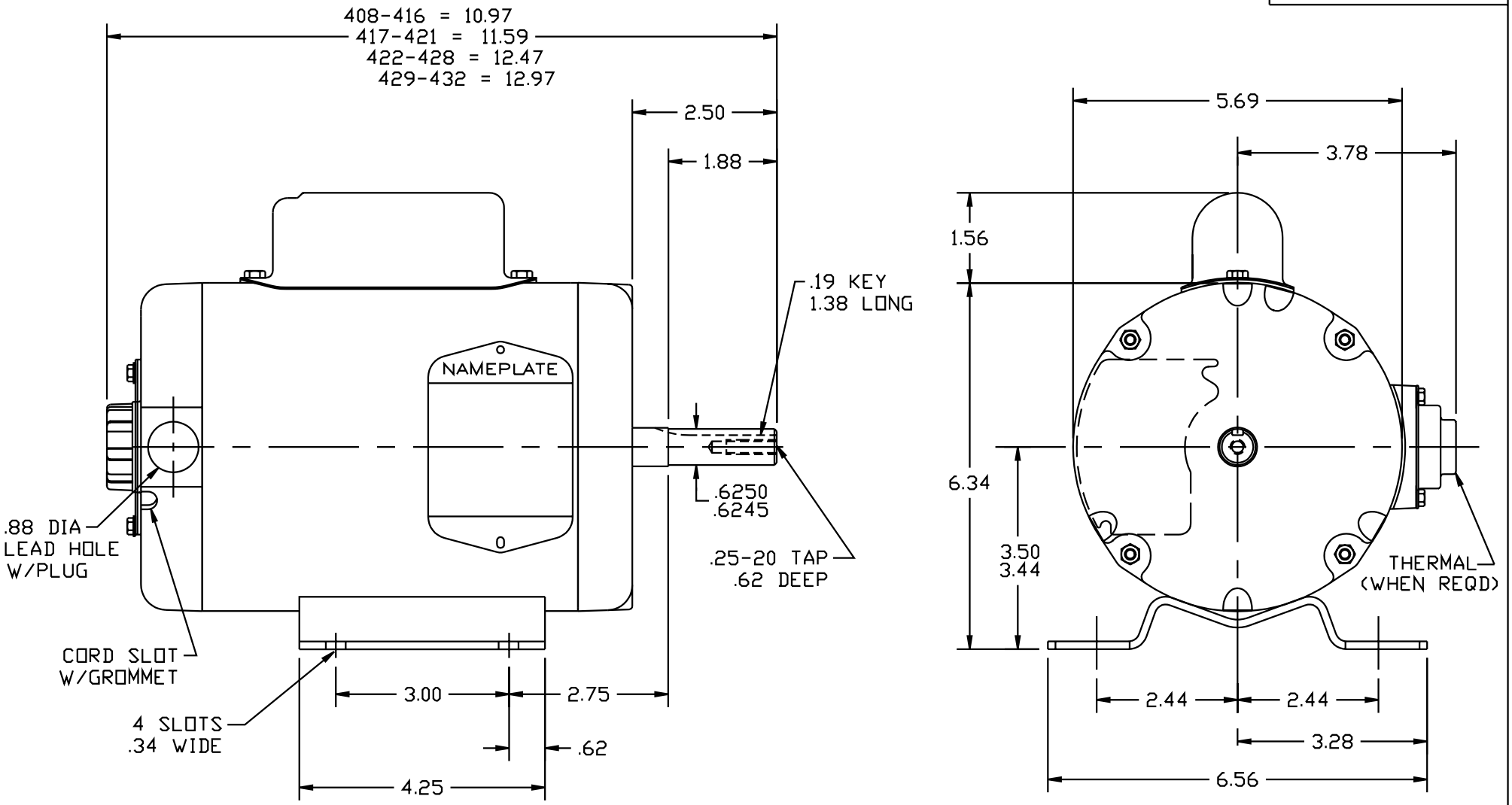

CUST. NAME	CUST. P.O.	CERTIFIED BY	MODEL	INSUL	AMB
H.P.	MTG	TYPE	R.P.M.	VOLTS	ENCL	PHASE	FREQ	FRAME

REMARKS:

REV:	B	MOVED TO ACAD

34K048

REF: 34C051	BY: MW	REVISED: 12/07/95
FILE: AAA00026170		TDR: 0086258

BALDOR ELECTRIC Co.

HORZ MODEL 34L NEMA 56Z TENV W/TERM PLATE (AERATION FAN MTR)

34K048