efi sales Ltd.
Equipment for the Foodservice Industry

Racks & Carts

CBC1624WD-15

STAINLESS STEEL MULTI-PURPOSE CART

- The shelves are made with 18 gauge type 430 stainless steel for durability and strength.
- The vertical struts are made with 16 gauge type 304 Stainless steel for added strength.
- Shelves and vertical struts are welded for added stability and strength as well as cleanliness
- Units come with stainless steel handles that bolt on to assist in maneuverability.
- Each cart comes with 4 castors; 2 with brakes and 2 without brakes.
- Units are shipped without castors or handles installed to reduce shipping size.

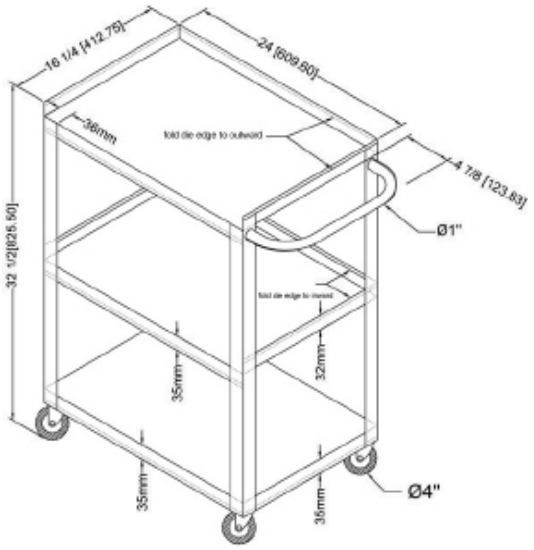

Finished dimensions:

- 16.25” Deep (483mm)
- 24.0” Long (787mm)
- 32.5” High (876mm)
- Weight 35 lbs. (16kg

Shipping dimensions:

- 17” X 30” X 33”
- (420 X 750 X 840mm)
- Weight 40 lbs. (18kg)

Carrying Capacity:

- 397 lbs (180kg)