DRAWING NUMBER

003251

ALL DIMENSIONS ARE AFTER PLATING

ALL THREADS TO BE FREE OF PAINT

REMOVE ALL BURRS & SHARP EDGES

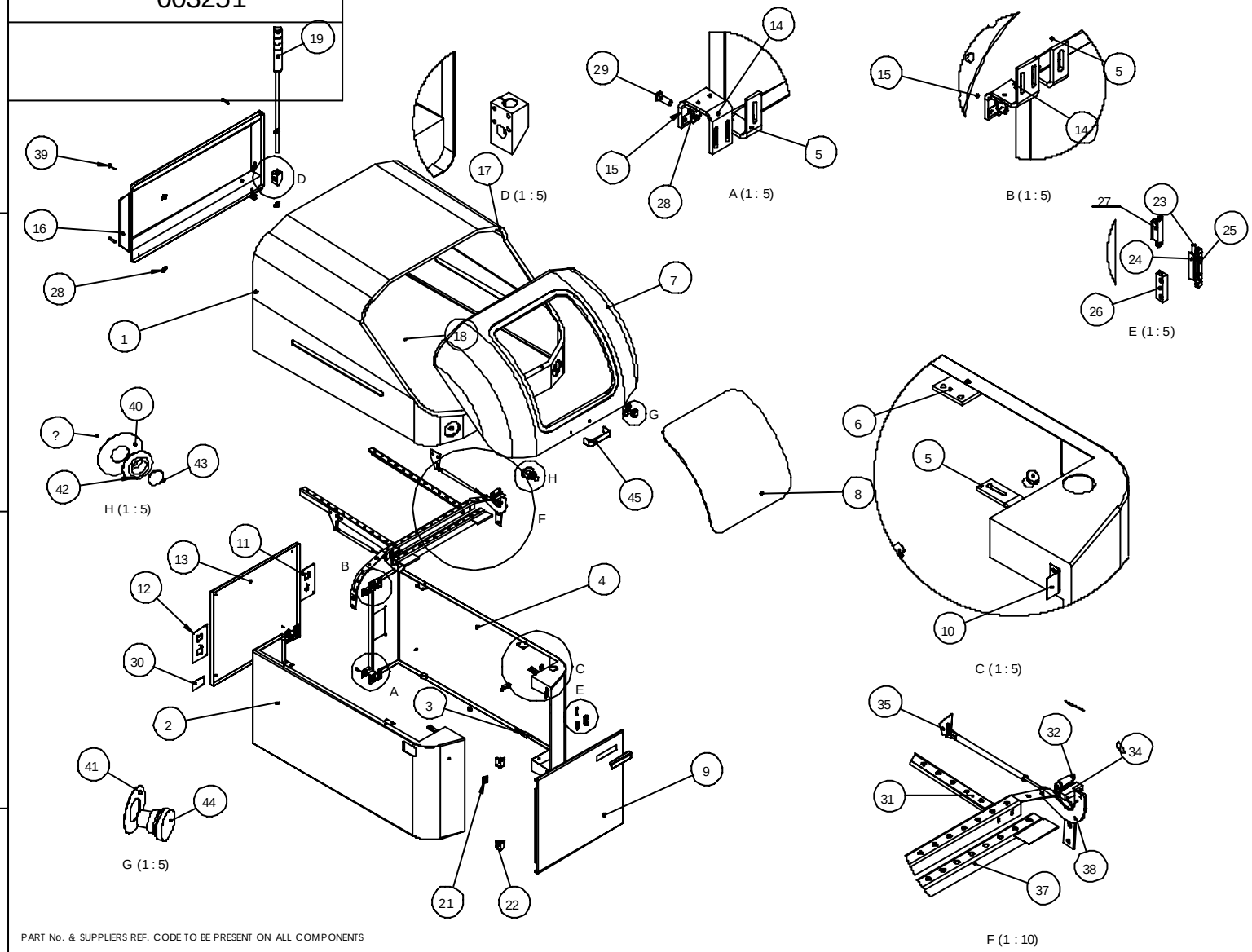

ITEM NO.	PART NO.	ISSUE	DESCRIPTION	QTY.
1	003066	A	TOP FIXED COVER	1
2	002077	C	SIDE PANEL LH	1
3	003247	A	BOTTOM BRACKET	4
4	003248	C	SIDE PANEL RH	1
5	003249	A	COVER BRACKET	6
6	003250	A	TOP COVER BRACKET	4
7	001348	B	LIFTING COVER	1
8	001351	A	WINDOW	1
9	002091	C	FRONT DOOR	1
10	001443	A	MAGNET CATCH PLATE	2
11	003260	A	FMI PANEL RH	1
12	003261	A	FMI PANEL LH	1
13	002078	B	BOTTOM REAR DOOR	1
14	003262	A	REAR DOOR BRACKET	4
15	003263	A	DZUS BRACKET	4
16	003264	C	TOP REAR COVER	1
17	002247	A	BEACON BRACKET	1
18	8 WAY	A	8 WAY MOLEX BRK	1
19	003218	A	BEACON	1
20	000338	A	DOOR HANDLE	1
21	000483	A	ESD BONDING POINT	1
22	003063	A	DOOR HINGE	2
23	001446	A	BRACKET	2
24	000366	A	SENSOR	2
25	001447	A	NUT PLATE	2
26	000367	A	SENSOR MAGNET	2
27	000378	A	DOOR MAGNET	2
28	001113	A	DZUS FASTENER	8
29	P001307	A	PANEL RETAINER	4
30	000672	A	NAME PLATE	1
31	001347W	A	METALWORK FOR 001347	1
32	000364	A	TOP COVER HINGE	2
34	001449	A	SPACER	2
35	001458	A	DAMPER BRK REAR	2
36	001267	A	LIFTING COVER DAMPER	2
37	001348W	A	METAL FOR 001348	1
38	001457	A	COVER PIVOT BRK	2
39	001685	A	PANEL RETAINER	4
40	000908	A	SYSTEM POWER LEGEND	1
41	000630	A	E-STOP LEGEND	1
42	000905	A	SYSTEM POWER SWITCH	1
43	000907	A	POWER SWITCH LENS	1
44	000659	A	E-STOP	1
45	000463	A	HANDLE	1
46	001672	A	LID MAGNET	2
47	001673	A	LID MAGNET PLATE	2

PART No. & SUPPLIERS REF. CODE TO BE PRESENT ON ALL COMPONENTS

THIS DRAWING AND THE COPYRIGHT IN IT, IS THE PROPERTY OF REPRINT LTD IT MAY NOT BE COPIED, REPRODUCED, PUBLISHED OR DISCLOSED IN WHOLE OR IN PART TO ANY THIRD PARTY WITHOUT THE WRITTEN CONSENT OF THE COMPANY.

SURFACE ROUGHNESS 1.6 Ám

THREADS: ISO COARSE TO CLASS 6H/6g U.O.S.

DIMENSIONS IN MM'S-INCHES IN ( )

MATERIAL: ASSY

FINISH: ASSY

TOLERANCES UNLESS OTHERWISE STATED

CAST.	± 0.5
GEN.	± 0.2
ANG.	± 0.5°
CRS.	± 0.1

CAD SCALE 1:12

DO NOT SCALE

HISTORY: X

LATEST ISSUE: No. A

DATE 13/01/2006

C/N

INITIAL

DRAWN G.C.

DATE 13/01/2006

PRODUCT CODE

TITLE: COVERS

DRAWING NUMBER 003251

SH. 1 OF 1

A 3