Advancer

Alcove Whirlpool Bathtub

SM-AB590

Features:

- Easy-to-clean, high gloss finish
- Fiberglass reinforced acrylic
- 3-Sided flange
- Built-in apron
- Left-handed drain
- Integrated tile flange
- Multi-color light
- Adjustable jets

Installation:

- Three-wall alcove

Colors & Finishes:

☐ White: SM-AB590

Specifications:

- N.W: 105.82 lb.
- L: 60” x W: 36” x H: 21 5/8”
- Soaking Depth: 14.5”
- Capacity of tub: 68 gallons

Included Parts:
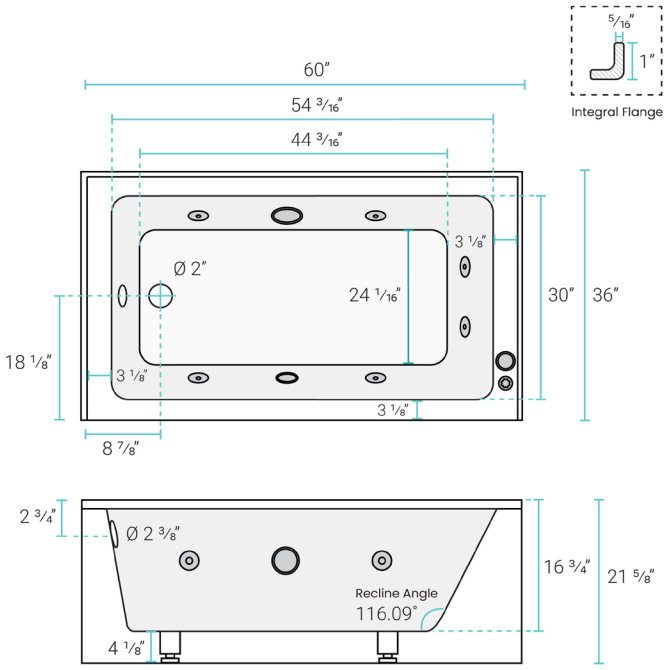
- Bathtub: SM-AB590
- Bathtub bars
- Bathtub foot bolt
- Bathtub screw pack
- Replacement adjustable jet: SM-BAB04
- Replacement backwater cover: SM-BAB05
- Replacement control pannel: SM-BAB03
- Replacement water pump: SM-BAB07
- Replacement pressure dial: SM-BAB06