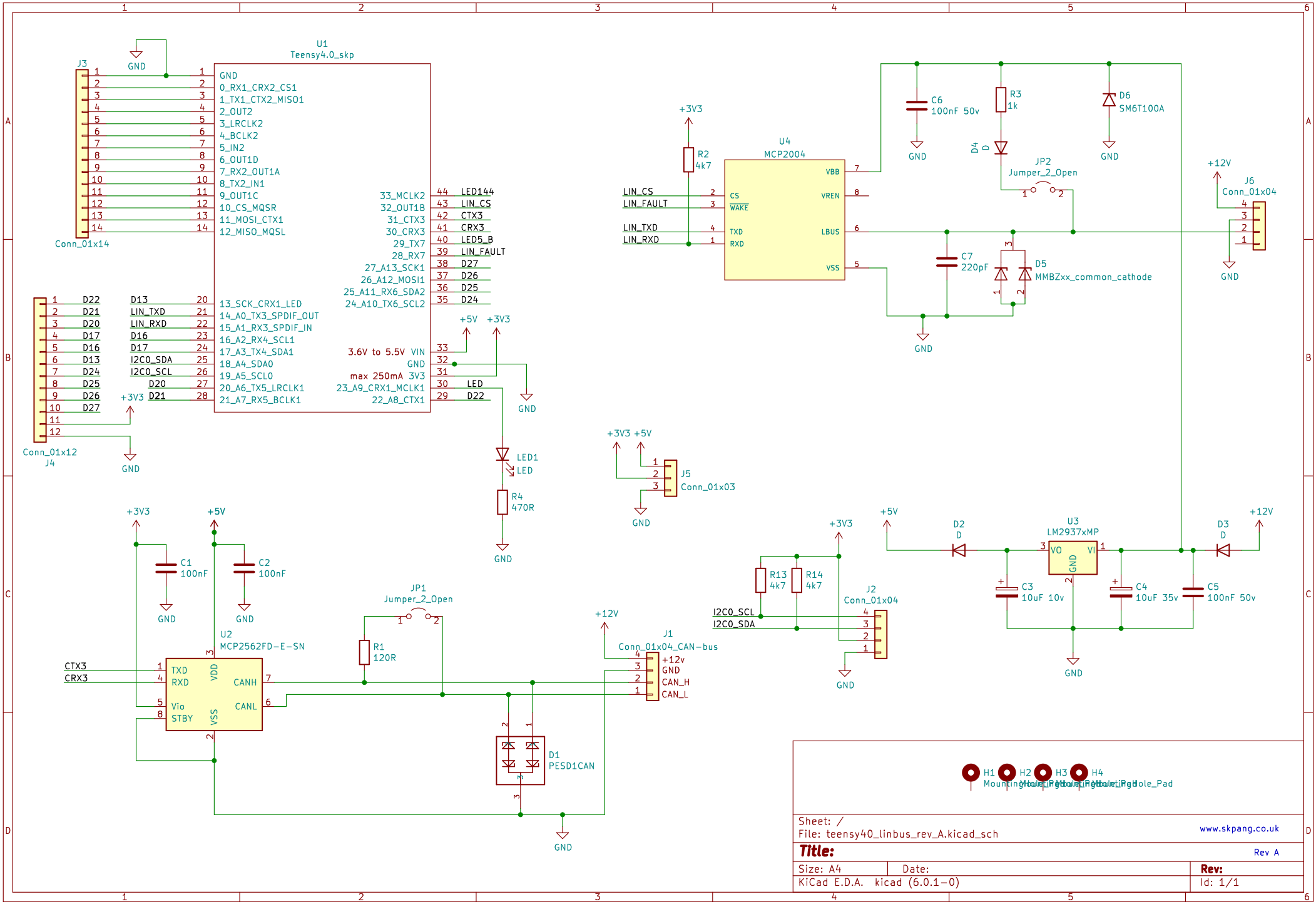
U1
Teensy4.0_skp
J3
Conn_01x14
J4
Conn_01x12
GND
+3V3
+5V
+12V
LED1
LED
R4
470R
R2
4k7
U4
MCP2004
LIN_CS
LIN_FAULT
LIN_TXD
LIN_RXD
C6
100nF 50v
R3
1k
D6
SM6T100A
D4
D
JP2
Jumper_2_Open
J6
Conn_01x04
C7
220pF
D5
MMBZxx_common_cathode
J5
Conn_01x03
C1
100nF
C2
100nF
JP1
Jumper_2_Open
R1
120R
U2
MCP2562FD-E-SN
CTX3
CRX3
J1
Conn_01x04_CAN-bus
+12v
CAN_H
CAN_L
D1
PESD1CAN
R13
4k7
R14
4k7
J2
Conn_01x04
I2C0_SCL
I2C0_SDA
D2
D
U3
LM2937xMP
C3
10uF 10v
C4
10uF 35v
C5
100nF 50v
D3
D
H1
H2
H3
H4
Mounting_Hole_Pad
Sheet: /
File: teensy40_linbus_rev_A.kicad_sch
www.skpang.co.uk
Title:
Rev A
Size: A4
Date:
Rev:
KiCad E.D.A. kicad (6.0.1-0)
Id: 1/1