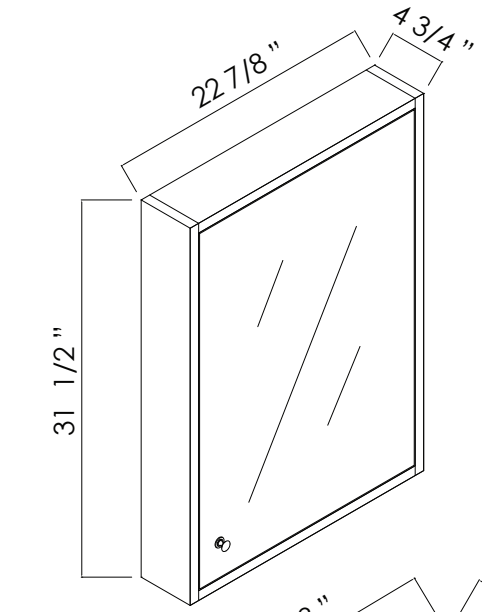
22 7/8 "
4 3/4 "
31 1/2 "

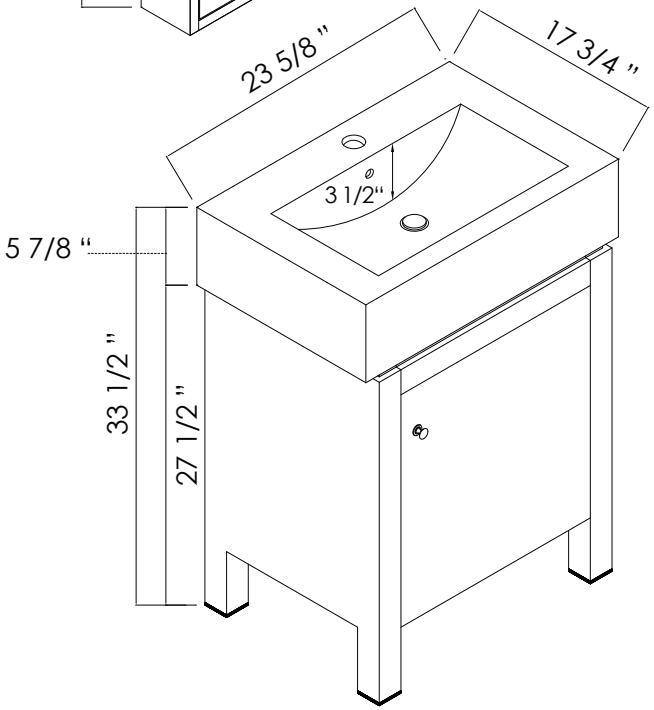
23 5/8 "
17 3/4 "
3 1/2"
5 7/8 "
33 1/2 "
27 1/2 "

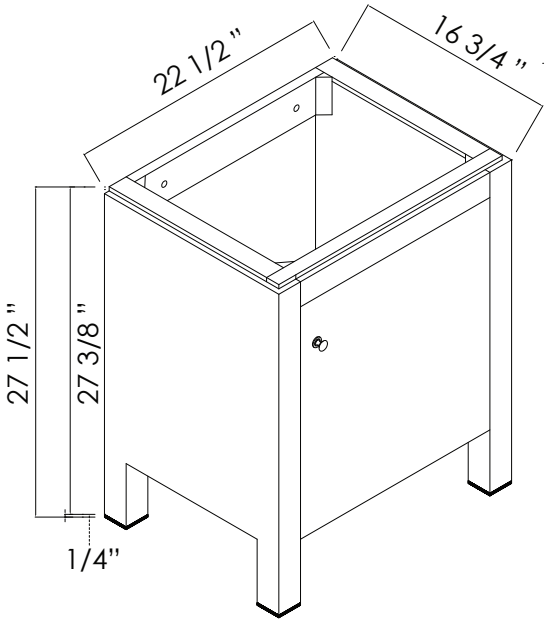
22 1/2 "
16 3/4 "
27 1/2 "
27 3/8 "
1/4"

BACK VIEW

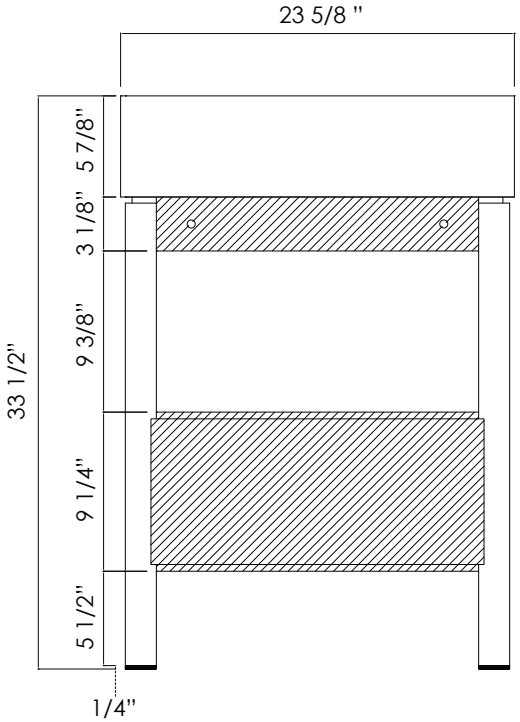
23 5/8 "
5 7/8"
3 1/8"
9 3/8"
9 1/4"
5 1/2"
33 1/2"
1/4"