TrueBlue™

DOCUMENT:
CoverUps FITTING GUIDE

STYLE NAME:
SYNTAX

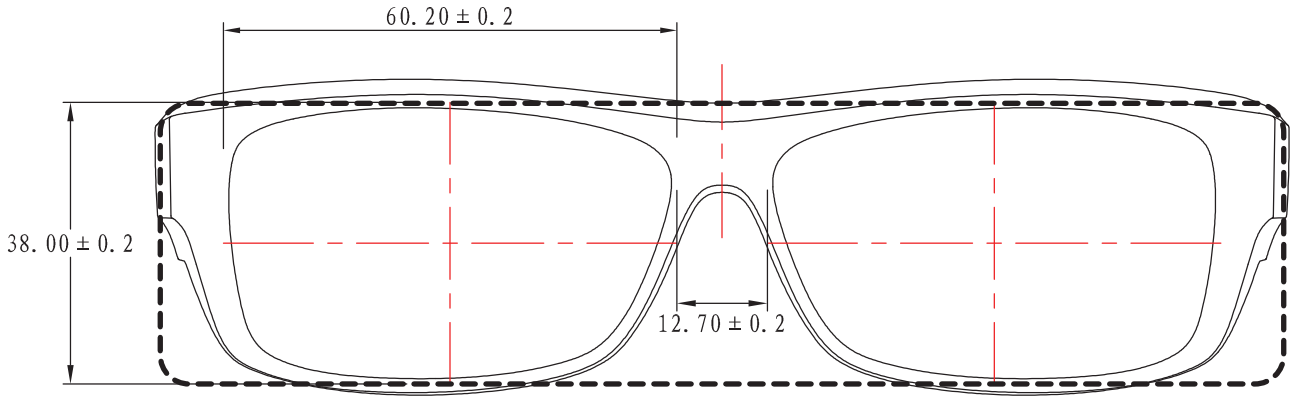

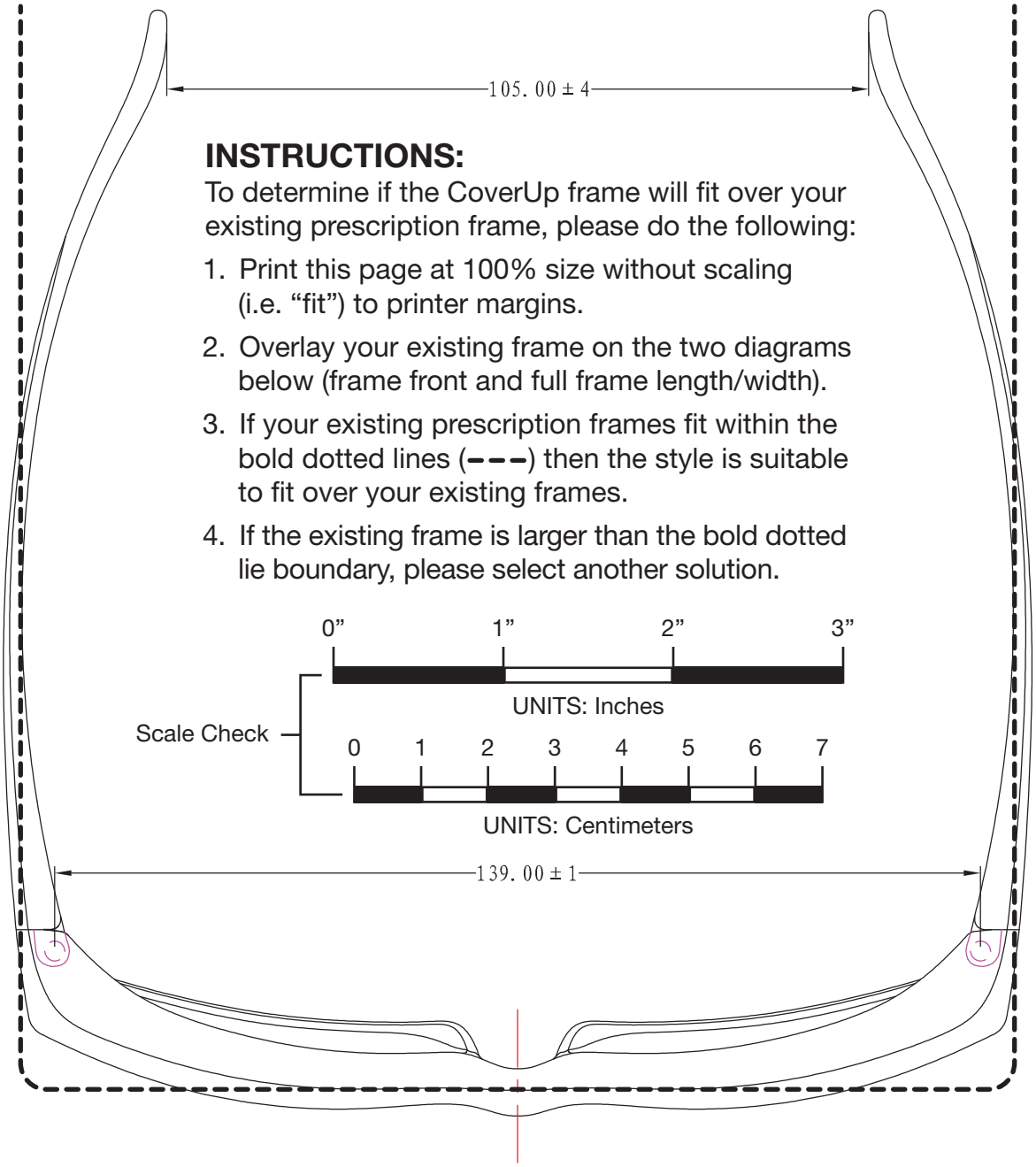

INSTRUCTIONS:

To determine if the CoverUp frame will fit over your existing prescription frame, please do the following:

1. Print this page at 100% size without scaling (i.e. “fit”) to printer margins.
2. Overlay your existing frame on the two diagrams below (frame front and full frame length/width).
3. If your existing prescription frames fit within the bold dotted lines (– – –) then the style is suitable to fit over your existing frames.
4. If the existing frame is larger than the bold dotted lie boundary, please select another solution.

Scale Check