Models LT783 LT786 LT796
Heavy Duty Tubular Latch

baton® Security Products

U.S. Patent 5,342,101

Baton Series LT780 Heavy duty Tubular Latches are constructed for durability and smooth operation. The forged brass latch bolt is reversible to facilitate all door handing. Available in satin brass (B) and satin nickel (N) finishes.

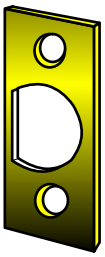

Latch is supplied with Lever/Lever or Knob/Knob strengths. The Lever latch is constructed with a superior strong spring and requires only 28 degrees downward rotation to retract the bolt. The Knob latch LT796 is designed to turn clockwise or counter-clockwise 52.5 degrees to retract the bolt. The specially designed split hubs are constructed from investment cast alloy steel, and can accommodate both privacy and passage applications. Hub sizes: '8' = 7.3mm Diamond/8.0mm Square

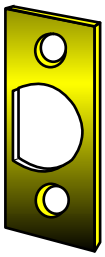

Finishes: US10, 10B, 14, 15, 15A, 19, 26, 26D, 3, 3N, 32, 32D, 4, 5, & 9

Latch, Faceplate, Strike and accessories can also be ordered separately. Please call Baton's Sales Department for details.

ANSI Grade 2

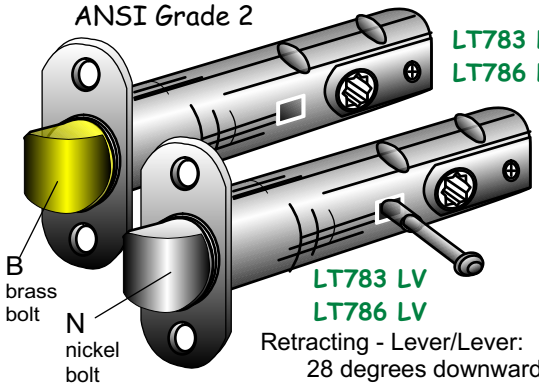

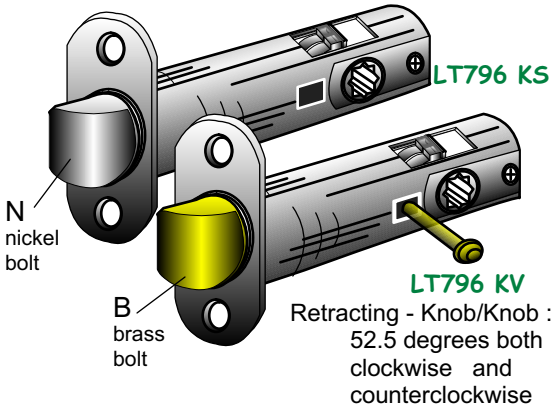

L08

The Privacy function has an anti-lock feature. Depressing the latch bolt by strike when door is closing, or operating the inside Knob/Lever unlocks the latch.

Stock No.		Backset	Function
Knob/Knob	Lever/Lever		
Brass Bolt			
	LT783LS8 B-__	2-3/8"	Passage
	LT783LV8 B-__	2-3/8"	Privacy
LT796KS8 B-__	LT786LS8 B-__	2-3/4"	Passage
LT796KV8 B-__	LT786LV8 B-__	2-3/4"	Privacy
LT79CKV8 B-__	LT78CLV8 B-__	custom	Privacy
Nickel Bolt			
	LT783LS8 N-__	2-3/8"	Passage
	LT783LV8 N-__	2-3/8"	Privacy
LT796KS8 N-__	LT786LS8 N-__	2-3/4"	Passage
LT796KV8 N-__	LT786LV8 N-__	2-3/4"	Privacy
LT79CKV8 B-__	LT78CLV8N-__	custom	Privacy

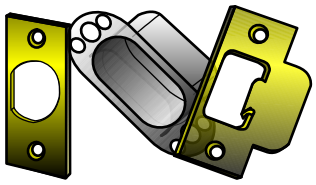

Furnished with Faceplate, LT-ST-182 'T' Strike, mounting screws and Dust Box as standard

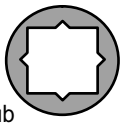

Universal Hub
8mm on square
& 7.3mm on diamond

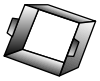

N8-H7
7mm hub sleeve/
to convert for
7mm spindles

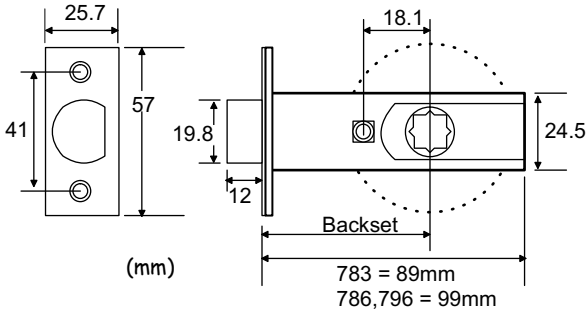

- See Page L02 Code Interpretation Guide for ordering
- For extended T Strikes, Full Lip Strikes and Combo Faceplate/Strikes please refer to pages L12 and L13