MATUREWARE
by FUTAGAMI

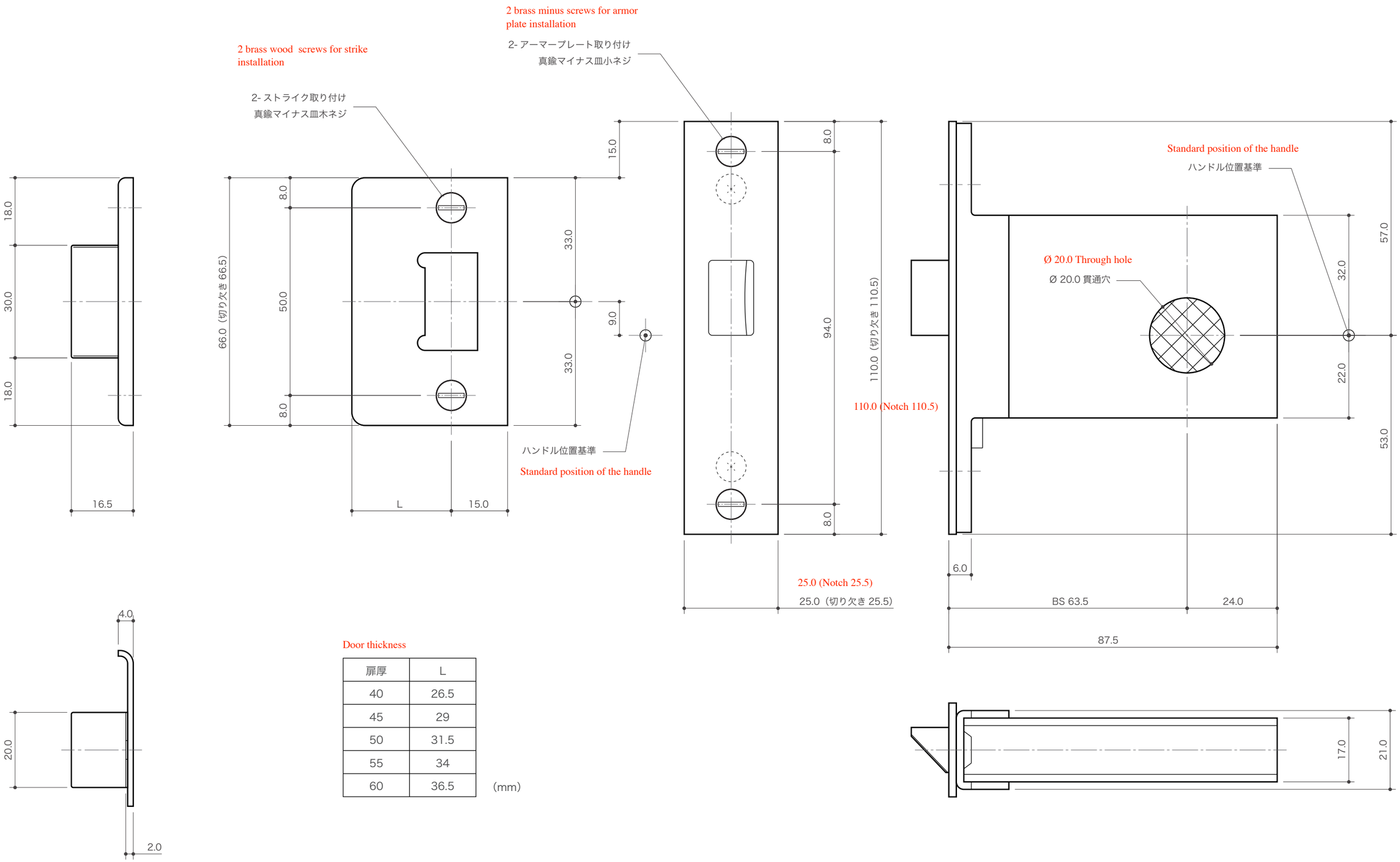

Door thickness

扉厚	L
40	26.5
45	29
50	31.5
55	34
60	36.5

(mm)

Cutaway view for the Mortise Lock Case, Strike and Strike Case

2015.03
S=1/1
「切り欠き図」ケース錠・ストライク・裏箱

MATUREWARE
by FUTAGAMI

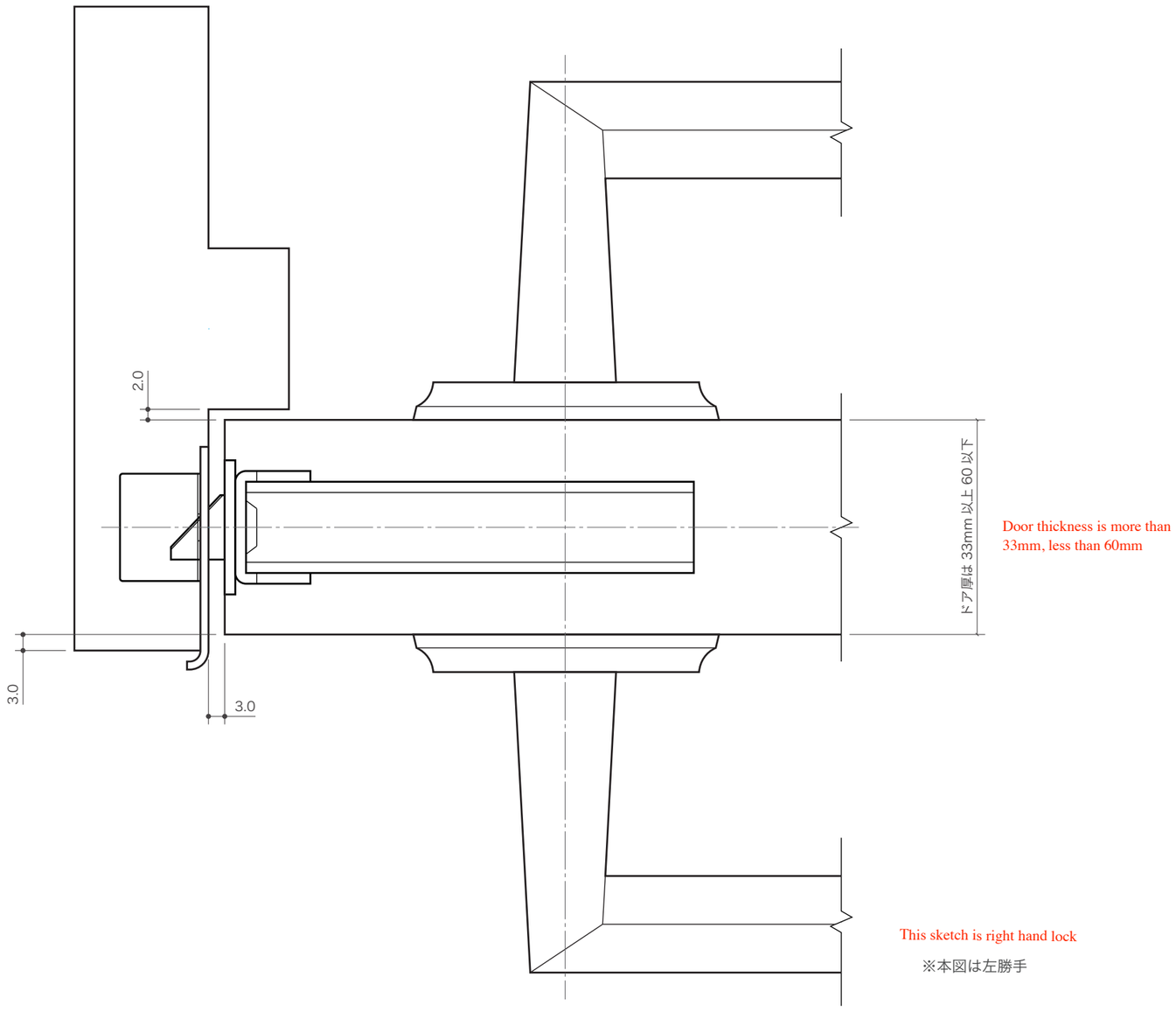

Mortise Lock Case

2015.03
S=1/1
ケース錠　取り付け