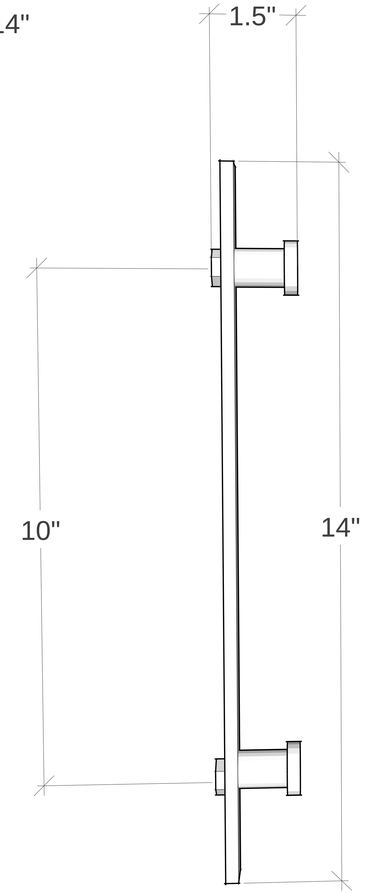HM pull 14"