TXS0108E
Logic Level Converter 8 Kanal
Pinout

GROUND - GND

HIGH SIDE I/O - B8

HIGH SIDE I/O - B7

HIGH SIDE I/O - B6

HIGH SIDE I/O - B5

HIGH SIDE I/O - B4

HIGH SIDE I/O - B3

HIGH SIDE I/O - B2

HIGH SIDE I/O - B1

HIGH VOLTAGE - VccB

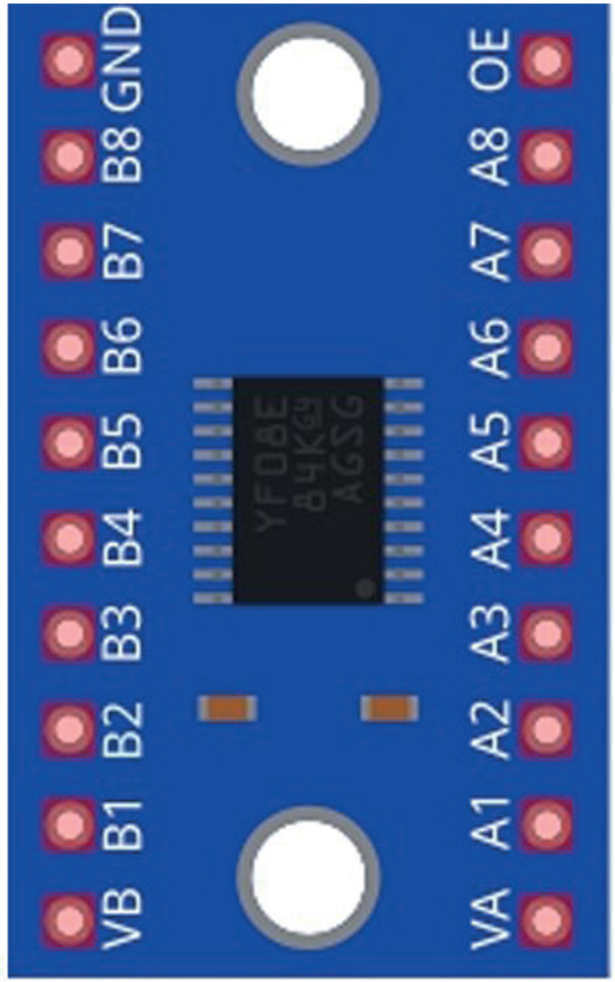

fritzing

OE - Output Enable Active HIGH

A8 - LOW SIDE I/O

A7 - LOW SIDE I/O

A6 - LOW SIDE I/O

A5 - LOW SIDE I/O

A4 - LOW SIDE I/O

A3 - LOW SIDE I/O

A2 - LOW SIDE I/O

A1 - LOW SIDE I/O

VccA - LOWER VOLTAGE