MB102 Breadboard Kit
Pinout

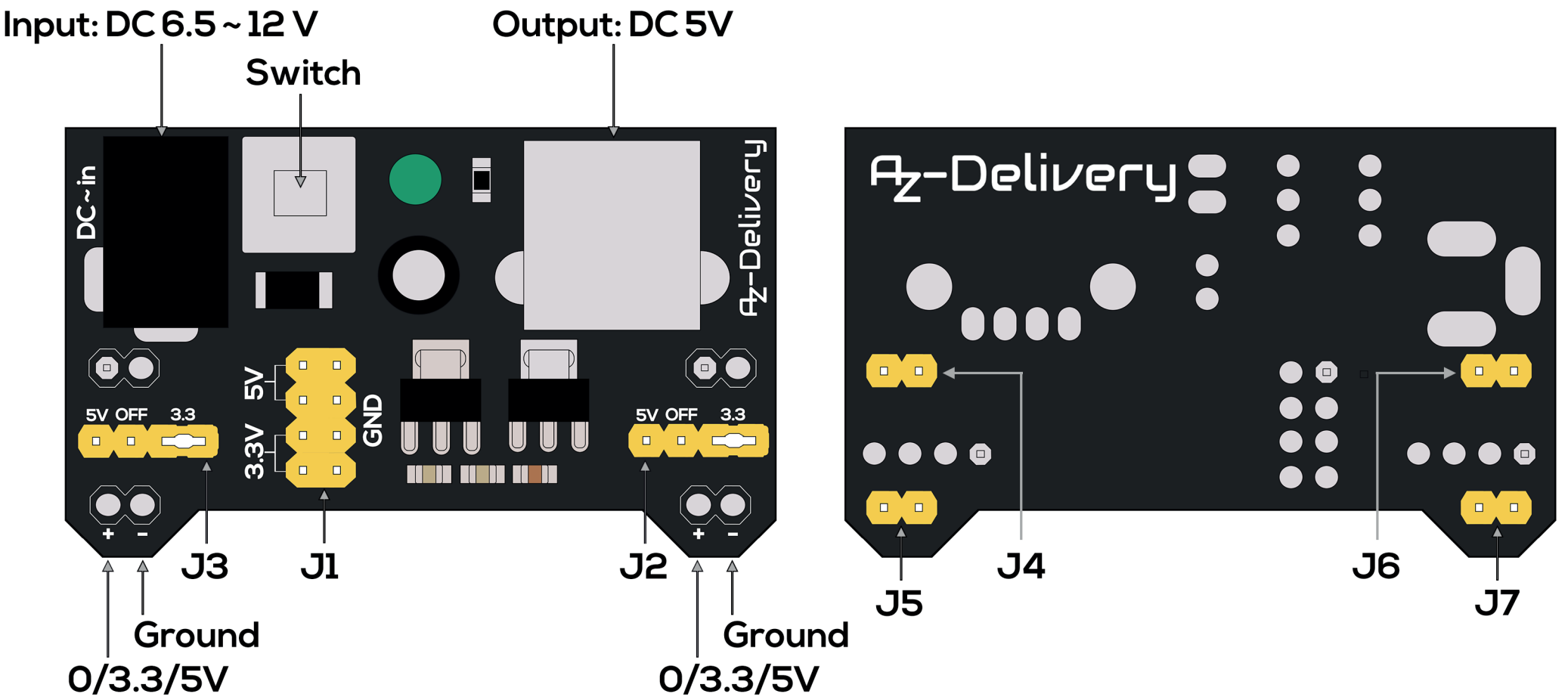
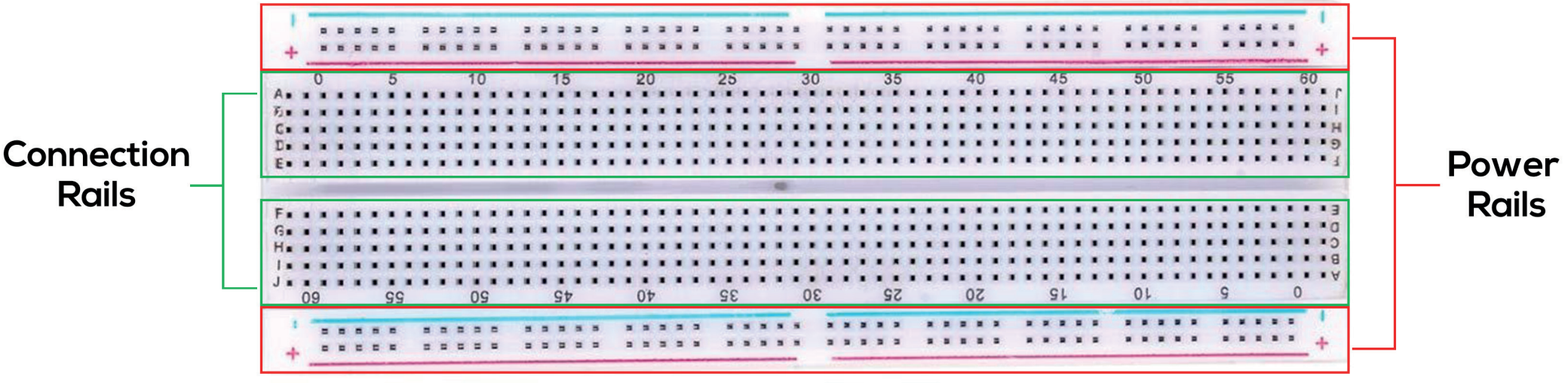
MB102 Breadboard Kit Pinout