G*GRASS®

NOVA PRO SCALA DRAWER SYSTEM

The new drawer generation.
Inspiration in the right angle.
Simple. Clear. Timeless.

GERMAN DESIGN AWARD WINNER 2016

handlie.com

Nova Pro Scala incorporates the best of Nova Pro. And much more besides!

186 millimetres.
This means an entirely new dimension in drawer sides.

The conventional wooden drawer is basically a four-sided box with a front panel. Strictly speaking, we are adopting a back-to-basics approach in offering a 186 mm drawer side for Nova Pro Scala. The new drawer side is high, closed and aesthetic. Sounds good. And it is.

Crystal Plus frame drawer.
More glass. More creative scope. More stability. With or without large design elements, the Crystal Plus frame drawer combines elegance with maximum strength.

NOVA PRO SCALA DRAWER SYSTEM

Nova Pro epitomises exceptional ease of opening, outstanding running properties, minimal drawer deflection and top reliability. Nova Pro Scala stands for versatility, neutral aesthetics, inspiration and creativity.

Nova Pro Scala is not only formally different from its Classic and Deluxe predecessors, but also has a number of large and small technical improvements.

Extraordinary product solutions evolve as the result of a continuous innovative force and concentration on the needs of our customers. It is advisable to carry products that have won through as groundbreaking innovations into the future in an unchanged form. If – as is the case with Nova Pro – it is proven over a decade that a concept was right, it is time to carry out carefully considered changes. The aim of our developers was therefore always to accommodate the track-proven technical features inside the high-tech drawer in the smallest possible space to give the design aspirations of furniture designers literally the greatest possible room for development. The result was an evolution based on the renowned Nova Pro concept: Nova Pro Scala.

The new Crystal Plus clip technology ensures simple assembly and removal as well as reliable attachment of the design elements. On Nova Pro Scala all visible plastic parts are covered with steel, eliminating colour differences between the individual parts. Everything is flush-fitting and matches perfectly to provide a harmonious, elegant impression.

Nova Pro Scala is inspiration in the right angle.

Metallic colours, fine structures and satin finishes – these are the features of modern design.

The new colour SILVER makes it possible to carry this design principle through to the furniture interior. The natural reflection of light and the fine surface structure inspired us to create the colour ICE. STONE as the symbol of eternity was the inspiration for the very popular shade of the same name.

Simple. Clear. Timeless.
Neutral, timeless style for ultra-modern, puristic furniture as well as for traditional, classic designs; for kitchens as well as for bathrooms and living areas.

Optimum space utilisation.
A minimum construction width and the 90-degree inside surfaces of the slim Scala drawer sides ensure up to 11 per cent more storage space.

Nova Pro Scala is design reduced to the essence – to clear design principles on the one hand and to the perfect unity of form and function on the other.

The purist design concept with its striking lines, right angles and small radii gives the double-wall metal drawer sides a timeless, technical and functional look. The special character of Nova Pro is hallmarked by its perfection down to the last detail and the modular system concept. Everything is focused on perfect function, top quality and lasting value – from the precision craftsmanship of every individual part as well as the colour and surface finishes.

Individualisation. Looking for ways to stand out from the crowd?

Tavinea 91.
Interior accessory system.

Two that are actually one. Nova Pro Scala and Tavinea 91 are almost symbiotically matched.

handlie.com

Individual designs.
Flush-fitting designer panels make Scala the most variable drawer system of its time.

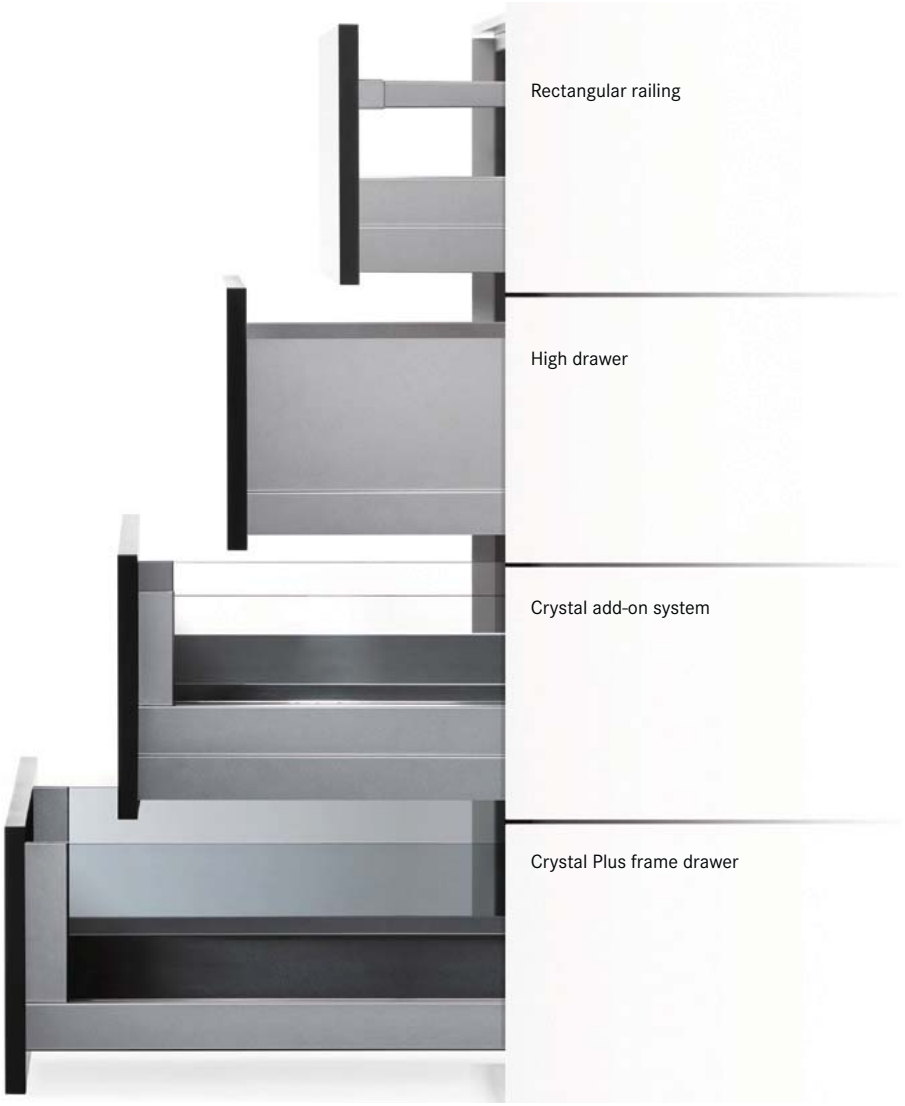

Differentiation.
Nova Pro Scala enables the creation of styles, functions and values that make that decisive difference.

Anyone who wants to be successful must be able to set themselves apart. This simple rule applies equally to all products.

To the kitchen, living room and bathroom furniture of our customers as well as to the GRASS movement systems. This made it all the more important for us to develop Nova Pro Scala as a drawer system which provides our customers with a fantastic way to make their products stand out from the crowd.

The new Scala drawer system can also be combined with the existing Classic and Deluxe systems, which opens up a wide and unique range of options for ensuring that the furniture interior makes a distinctive impression.

Good to know the movement is not only technically functional, but also extremely comfortable. Because that makes every opening action an experience.

Opening drawers has never offered such comfort. And closing them has never been such a satisfying experience. The GRASS comfort systems and Nova Pro Scala complement each other to form a harmonious multi-functional unit. We aim to combine the advantages of handle-free opening with the elegance of damped closing. Because the combination of these outstanding functions guarantees the highest level of operating comfort.

It's good to find things that were simply made for each other.

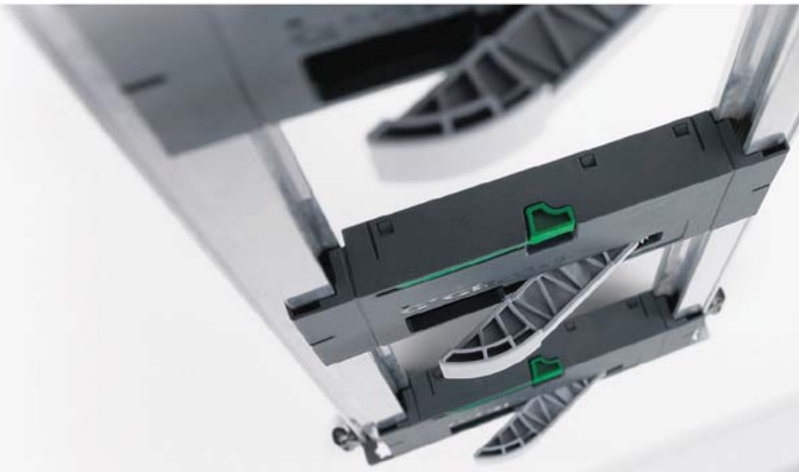

TIPMATIC
OPENING SYSTEMS

Mechanical opening of regular and pot drawers.

Tipmatic opens up optimum styling options for furniture that meets high design and aesthetic aspirations. Thanks to the touch-activated mechanism and the synchronisation option, it is possible to operate large handle-free fronts and doors which will open with a gentle tap.

The new Tipmatic Soft-close opening system combines the advantages of mechanical opening with the comfort of the track-proven Soft-close damping, and with the three-stage adjustable opening force guarantees elegant movement, irrespective of the weight and size of the furniture fronts.

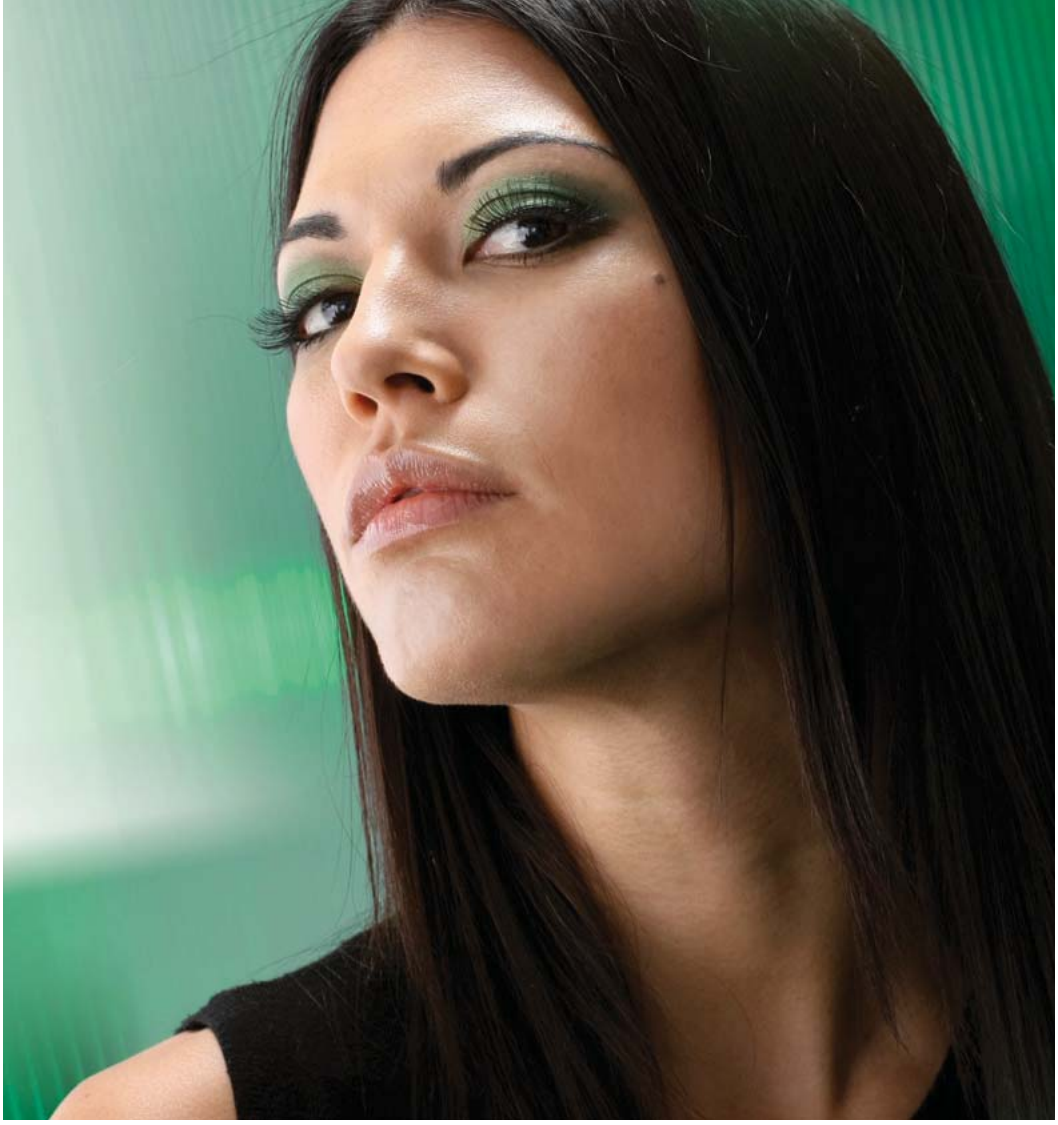

SOFT-CLOSE
DAMPING SYSTEM

With the GRASS Soft-close damping concept, each movement becomes an experience. Closing Nova Pro Scala drawers with Soft-close is something special. Soft-close gently slows the fronts and pulls them to the fully closed position.

With the very low pull-out forces, slender handles are also possible.

SENSOMATIC
OPENING SYSTEM

Electro-mechanical opening of regular and pot drawers for top operating comfort.

Thanks to Sensomatic's automatic touch-sensitive function, a gentle trigger is enough to start the movement of the Nova Pro Scala drawers with handle-free fronts.

Modern furniture shows what it is made of. With this in mind Nova Pro Scala offers two unique product solutions – the Crystal and Crystal Plus add-on systems.

The absolute minimum for the technical elements, a strong holder at the front and back – let the fun begin!

Individual taste then decides whether glass or another material is used as a design element. The special advantage of the new Crystal Plus frame drawer is the newly developed clip technology. It ensures safe and strong bracing of large design elements without having to prepare them in any way. For Nova Pro Scala we've subjected the Crystal add-on system to a fundamental redesign.

handlie.com

NOVA PRO SCALA DRAWER SYSTEM

Nova Pro Scala enables the creation of styles,
functions and values which make all the difference.

NOVA PRO SCALA **13**

The new drawer generation is a perfect combination of form and function and opens up a wide range of differentiation options.

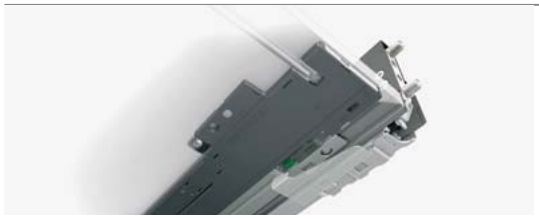

NOVA PRO TIPMATIC SOFT-CLOSE **36**

Mechanical opening system for handle-free fronts.

NOVA PRO SENSOMATIC **73**

Electromechanical opening system for regular and pot drawers.

DIVIDING AND ORGANISING SYSTEMS **95**

Organising, dividing, fitting out – useful aids for organising storage space.

ASSEMBLY TECHNOLOGY **120**

Installation and assembly aids. Track-proven, tried and tested technology for professional efficiency.

Nova Pro Scala offers everything that furniture hearts desire.

A module system requires standards that can be combined.

In the case of Nova Pro Scala these are four side wall depths. Starting with 63 mm for limited available heights through to the standard 90 mm drawer, the 122 mm intermediate height and the 186 mm for higher closed sides requirements. The drawer with a rectangular railing, the Crystal add-on system and the new Crystal Plus frame drawer. Combined with Nova Pro Classic and Deluxe, they create an extremely modular system for all price segments.

handlie.com

NOVA PRO SCALA

The new drawer generation is a perfect combination of form and function and opens up a wide range of differentiation options.

Product designation	Page
Drawer H63	16
Drawer H90	18
Drawer H122	20
High drawer H186	22
Pot drawer H90 with rectangular railing	24
Pot drawer H90 with rectangular railing and front support	26
Crystal pot drawer for slide-in elements, height 94 mm	28
Crystal Plus frame drawer for large slide-in elements, height 140 mm	30
Nova Pro full extension slide 40/70 kg Soft-close S16/S19	32
Nova Pro full extension slide 40/70 kg Soft-close S18	34
Nova Pro full extension slide 40/70 kg Tipmatic Soft-close S16/S19	36
Nova Pro full extension slide 40/70 kg Tipmatic Soft-close S18	38
Nova Pro full extension slide 40/70 kg Tipmatic Plus S16/S19	40
F8 inset panels	42
Rectangular railing and divider railing	52
Crystal clip for slide-in elements	54
Steel back panels	56
Designer panels	58

Accessories	60
Technical information	66
Assembly technology	120
Assembly aid	124

NOVA PRO SCALA

	Product description		Page
	Drawer H63 • Extremely low drawer for limited available heights • Can be personalised with designer panels • Integrated height and side adjustment	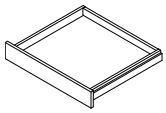	16
	Drawer H90 • The practical standard drawer for all applications • Can be personalised with designer panels • Integrated height and side adjustment	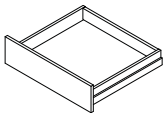	18
	Drawer H122 • The elegant intermediate height for special applications • Can be personalised with designer panels • Integrated height, side and tilt angle adjustment	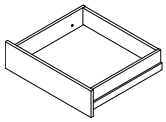	20
	High drawer H186 • Slim, closed box drawer • High stability up to a front height of 780 mm • Can be personalised with designer panels	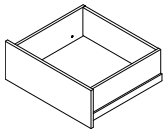	22
	Pot drawer H90 with rectangular railing • Snug-fitting rectangular railing • Flush-fitting back panel adapter • Minimum plastic parts	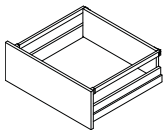	24
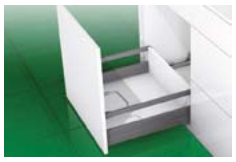	**Pot drawer H90 with rectangular railing and front support** • Additional fixing points for optimum stability with extra-high fronts • Flush-fitting back panel adapter • Integrated height, side and tilt angle adjustment	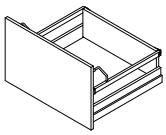	26
	Crystal pot drawer for slide-in elements, height 94 mm • No processing of the slide-in elements necessary • High level of stability, also without front and slide-in elements • Elegant, steel covered glass clips	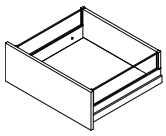	28
	Crystal Plus frame drawer for large slide-in elements, height 140 mm • Patented clip technology makes it easy to slide the elements in • No additional clips or cover caps • High level of stability, also without front and slide-in elements	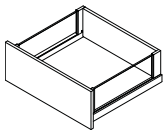	30

handlie.com

	Product description		Page
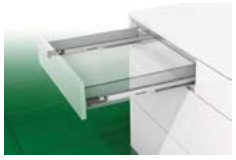	**Nova Pro full extension slide 40/70 kg Soft-close S16/S19** • Construction width 29 mm • Used with S16 and S19 • Excellent running characteristics • Fully-synchronised slide technology	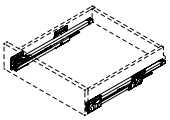	32
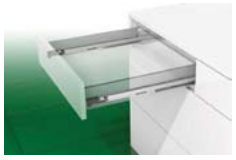	**Nova Pro full extension slide 40/70 kg Soft-close S18** • Construction width 30 mm • Used with S18 • Excellent running characteristics • Fully-synchronised slide technology	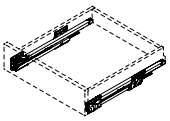	34
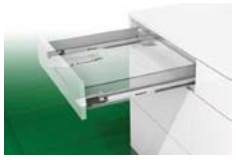	**Nova Pro full extension slide 40/70 kg Tipmatic Soft-close S16/S19** • Mechanical opening system • Combines Tipmatic function with Soft-close damping • Construction width 29 mm • Used with S16 and S19	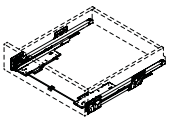	36
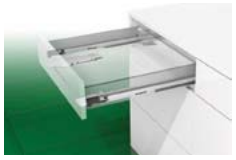	**Nova Pro full extension slide 40/70 kg Tipmatic Soft-close S18** • Mechanical opening system • Combines Tipmatic function with Soft-close damping • Construction width 30 mm • Used with S18	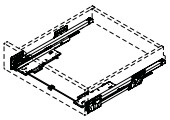	38
	Nova Pro full extension slide 40/70 kg Tipmatic Plus S16/S19 • Mechanical opening system • Construction width 29 mm • Used with S16 and S19 • Excellent running characteristics	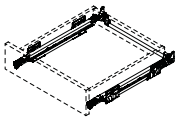	40
	F8 inset panels • Colour-coordinated aluminium front panel profile • Same dimensions as for standard drawers (inside depth) • Available in the heights H90 and H186 • Also for cutting to length	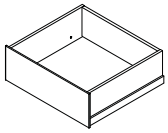	42
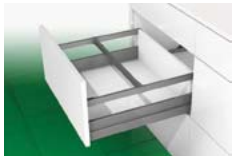	**Rectangular railing and divider railing, individual components** • Easy to fit • Can be ordered separately	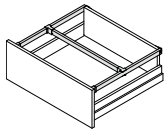	52
	Crystal clip for slide-in elements • For slide length of 8 mm • For wooden and steel back panels	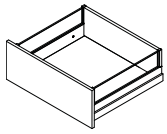	54
	Steel back panels • Steel back panels for regular and pot drawers • Colour coordinated • In the heights H63, H90 and H186	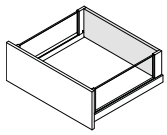	56
	Designer panels • Installation information for designer panels H63, H90, H122 and H186 • Magnetic adhesive tape can be ordered	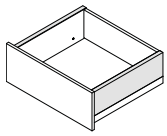	58

NOVA PRO SCALA
Drawers H63

- Extremely low drawer for limited heights
- Can be personalised with designer panels
- Integrated height and side adjustment
- Optimum use of space due to straight inside surfaces and low construction width
- Robust design and high level of stability
- Tool-free installation and removal of the front
- Width of bottom and back panel is the same
- Bottom panel machining not required

Packaging unit (PU):
123 = 100 items in PE
201 = 1 item in cardboard box (smallest PU = 10 units)
211 = 20 items in a cardboard box
228 = 150 items in a cardboard box
250 = 1500 items in a cardboard box

ORDER INFORMATION

1 Nova Pro Scala drawer sides H63
Set: One left, one right

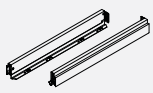

NL	Stone				Ice				Silver							
	Item No.	PU			Item No.	PU			Item No.	PU						
400	**F100**103**009**	201	211		**F100**103**036**	201	211		**F100**103**063**	201	211					
450	**F100**103**012**	201	211		**F100**103**039**	201	211		**F100**103**066**	201	211					
500	**F100**103**015**	201	211	228	**F100**103**042**	201	211	228	**F100**103**069**	201	211	228				
550	**F100**103**018**	201	211		**F100**103**045**	201	211		**F100**103**072**	201	211					

2 Installation hook
Single item: Can be used on left/right

	Description	Item No.	PU		
	Expansion dowel	**F102**117**716**	123		
	For press fitting	**F102**038**331**	123	250	
	For screw fixing	**F102**038**330**	123		

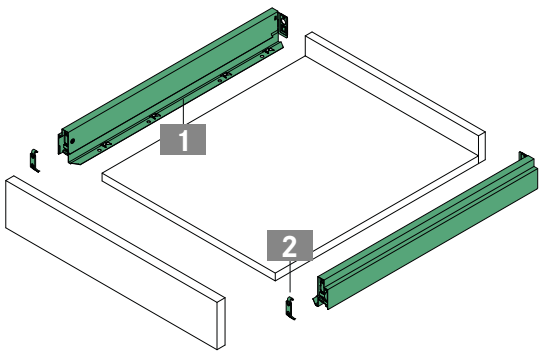

PAGE REFERENCES

Slides	32	Accessories	60	Assembly technology	120
Steel back panels	56	Technical information	66	Assembly aids	124
Designer panels	58	Sensomatic	73	Packaging code	131

handlie.com

PLANNING DIMENSIONS

All dimensions in millimetres

Front installation dimensions

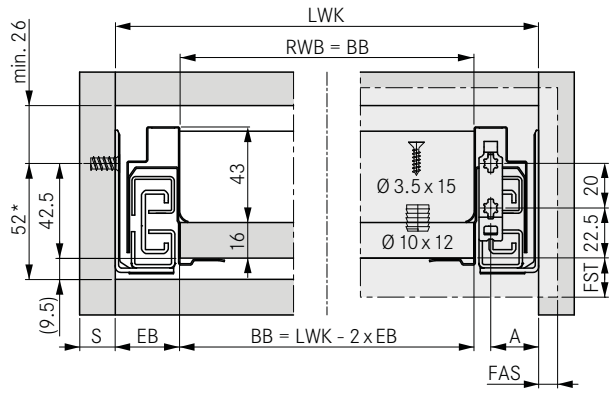

* Recommendation/Minimum dimension: 49.5 mm/Tipmatic Soft-close: 58 mm

Back panel installation dimensions

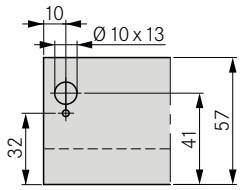

Cutting dimensions for 16 mm chipboard

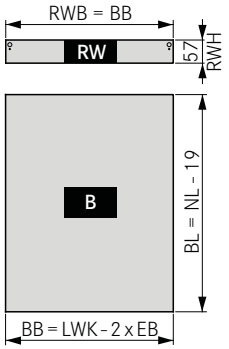

Slide

S	16/19	18
EB	29	30
A	21.5	22.5

Note: Slide available in two versions: For S16/S19 and S18. Refer to the Slides section (from page 32).

Fixing positions for full extension slide

Euro screw Ø 6 x 13 mm

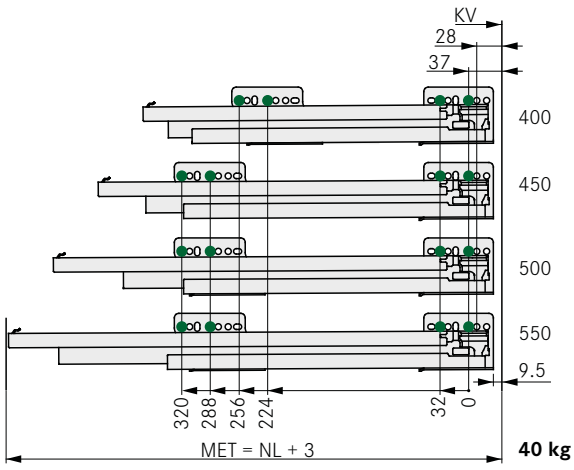

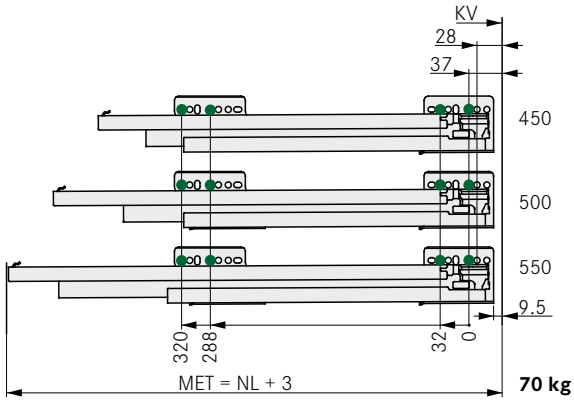

LEGEND

B	Bottom panel
BB / BL	Bottom width / Bottom length
EB	Construction width
FAS	Front overlay, side
FST	Front overlay
KV	Front edge of cabinet
LWK	Inside cabinet width
MET	Minimum installation depth
NL	Nominal length
RW	Back panel
RWB	Width of back panel
RWH	Height of back panel

NOVA PRO SCALA
Drawers H90

- The practical standard drawer for all applications
- Can be personalised with designer panels
- Integrated height and side adjustment
- Optimum use of space due to straight inside surfaces and low construction width
- Robust design and high level of stability
- Tool-free installation and removal of the front
- Width of bottom and back panel is the same
- Bottom panel machining not required

Packaging unit (PU):
123 = 100 items in PE
201 = 1 item in cardboard box (smallest PU = 10 units)
211 = 20 items in a cardboard box
228 = 150 items in a cardboard box
250 = 1500 items in a cardboard box
547 = 1000 items in PE in a cardboard box

ORDER INFORMATION

1 Nova Pro Scala drawer sides H90
Set: One left, one right

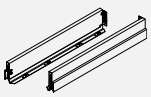

NL	Stone				Ice				Silver							
	Item No.	PU			Item No.	PU			Item No.	PU						
270	**F100**103**108**	201	211		**F100**103**135**	201	211		**F100**103**162**	201	211					
300	**F100**103**111**	201	211		**F100**103**138**	201	211		**F100**103**165**	201	211					
350	**F100**103**114**	201	211		**F100**103**141**	201	211		**F100**103**168**	201	211					
400	**F100**103**117**	201	211		**F100**103**144**	201	211		**F100**103**171**	201	211					
450	**F100**103**120**	201	211	228	**F100**103**147**	201	211	228	**F100**103**174**	201	211	228				
500	**F100**103**123**	201	211	228	**F100**103**150**	201	211	228	**F100**103**177**	201	211	228				
550	**F100**103**126**	201	211		**F100**103**153**	201	211		**F100**103**180**	201	211					
600	**F100**103**129**	201	211		**F100**103**156**	201	211		**F100**103**183**	201	211					
650	**F100**103**132**	201	211		**F100**103**159**	201	211		**F100**103**186**	201	211					

2 Installation hook
Single item: Can be used on left/right

	Description	Item No.	PU		
32 mm	Expansion dowel	**F102**117**719**	123	547	
50 mm	Expansion dowel	**F102**117**720**	123	547	
32 mm	For press fitting	**F102**021**854**	123		250
50 mm	For press fitting	**F102**021**153**	123		250
	For screw fixing	**F102**021**855**	123	547	

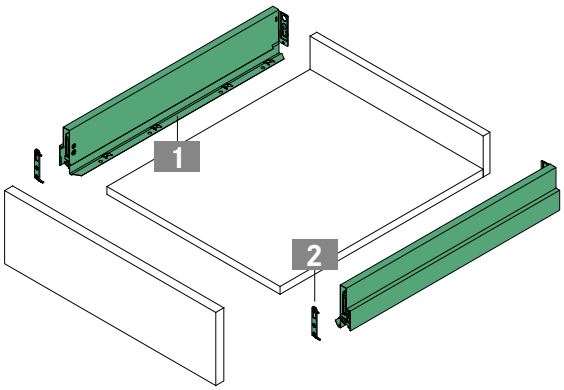

PAGE REFERENCES

Slides	32	Steel back panels	56	Technical information	66
Inset panels	42	Designer panels	58	Sensomatic	73
Rectangular railing	52	Accessories	60	Organising systems	95

handlie.com

PLANNING DIMENSIONS

All dimensions in millimetres

Front installation dimensions

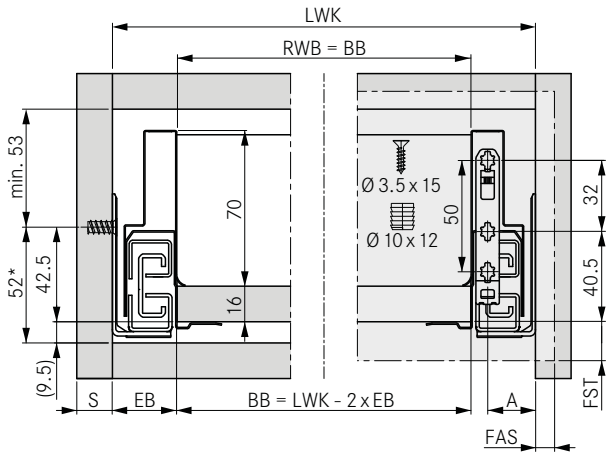

* Recommendation/Minimum dimension: 49.5 mm/Tipmatic Soft-close: 58 mm

Back panel installation dimensions

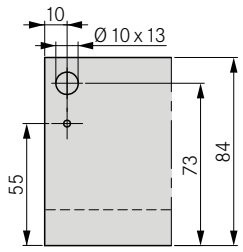

Cutting dimensions for 16 mm chipboard

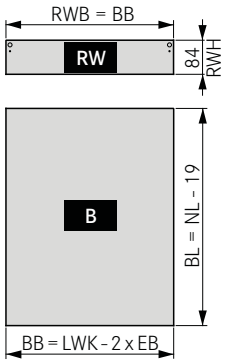

Slide

	16/19	18
S		
EB	29	30
A	21.5	22.5

Note: Slide available in two versions: For S16/S19 and S18. Refer to the Slides section (from page 32).

Fixing positions for full extension slide

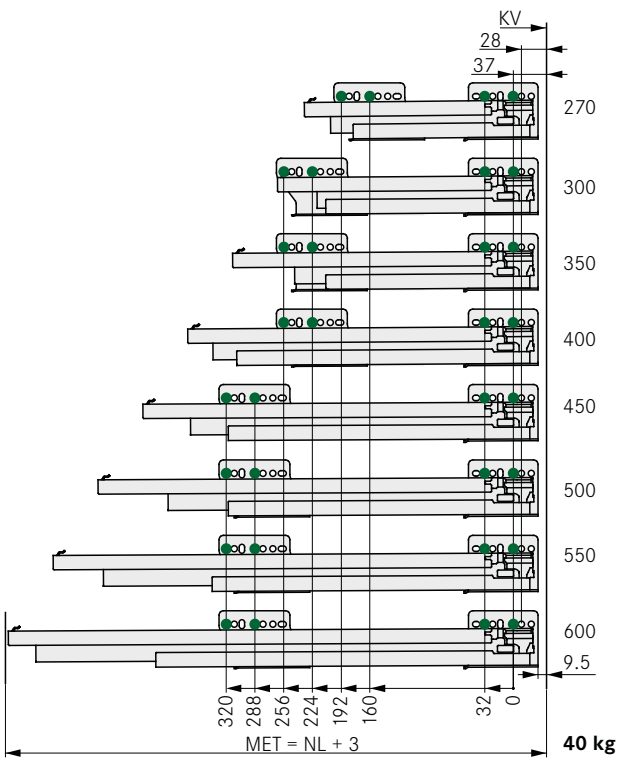

Euro screw Ø 6 x 13 mm

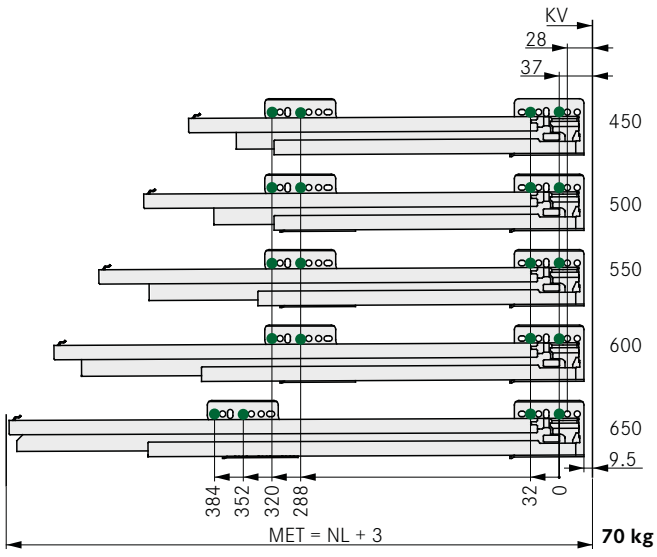

LEGEND

B	Bottom panel
BB / BL	Bottom width / Bottom length
EB	Construction width
FAS	Front overlay, side
FST	Front overlay
KV	Front edge of cabinet
LWK	Inside cabinet width
MET	Minimum installation depth
NL	Nominal length
RW	Back panel
RWB	Width of back panel
RWH	Height of back panel

NOVA PRO SCALA
Drawers H122

- The elegant intermediate height for special applications
- Can be personalised with designer panels
- Integrated height, side and tilt angle adjustment
- Optimum use of space due to straight inside surfaces and low construction width
- Robust design and high level of stability
- Tool-free installation and removal of the front
- Width of bottom and back panel is the same
- Bottom panel machining not required

Packaging unit (PU):
123 = 100 items in PE
201 = 1 item in cardboard box (smallest PU = 10 units)
211 = 20 items in a cardboard box
250 = 1500 items in a cardboard box
547 = 1000 items in PE in a cardboard box

ORDER INFORMATION

1 **Nova Pro Scala drawer sides H122**
Set: One left, one right

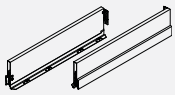

NL	Stone				Ice				Silver							
	Item No.	PU			Item No.	PU			Item No.	PU						
400	**F100**103**225**	201	211		**F100**103**252**	201	211		**F100**103**279**	201	211					
450	**F100**103**228**	201	211		**F100**103**255**	201	211		**F100**103**282**	201	211					
500	**F100**103**231**	201	211		**F100**103**258**	201	211		**F100**103**285**	201	211					
550	**F100**103**234**	201	211		**F100**103**261**	201	211		**F100**103**288**	201	211					
600	**F100**103**237**	201	211		**F100**103**264**	201	211		**F100**103**291**	201	211					

2 **Installation hook**
Single item: Can be used on left/right

	Description	Item No.	PU		
32 mm	Expansion dowel	**F102**117**719**	123	547	
50 mm	Expansion dowel	**F102**117**720**	123	547	
32 mm	For press fitting	**F102**021**854**	123		250
50 mm	For press fitting	**F102**021**153**	123		250
	For screw fixing	**F102**021**855**	123	547	

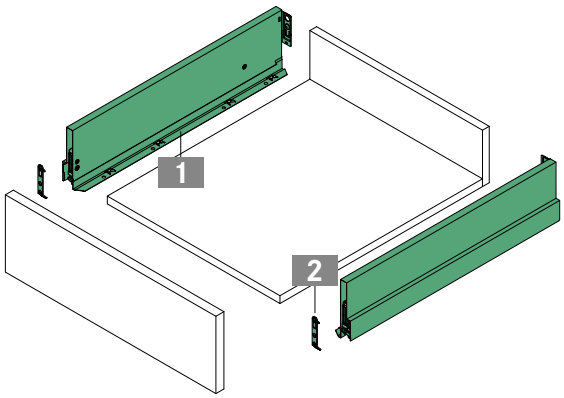

PAGE REFERENCES

Slides	32	Technical information	66	Assembly technology	120
Designer panels	58	Sensomatic	73	Assembly aids	124
Accessories	60	Organising systems	95	Packaging code	131

handlie.com

PLANNING DIMENSIONS

All dimensions in millimetres

Front installation dimensions

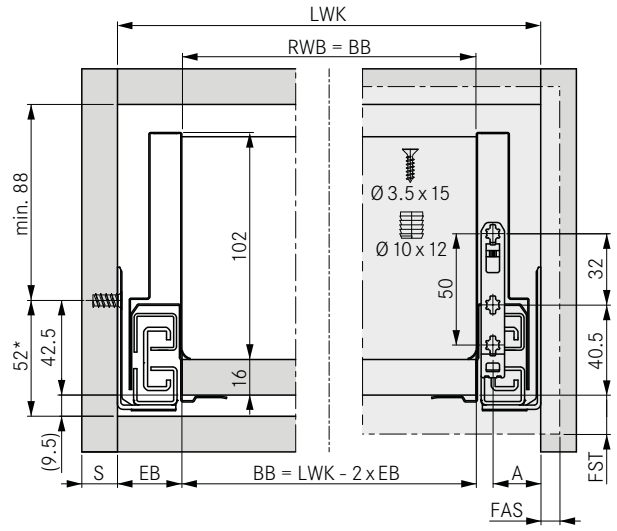

* Recommendation/Minimum dimension: 49.5 mm/Tipmatic Soft-close: 58 mm

Back panel installation dimensions

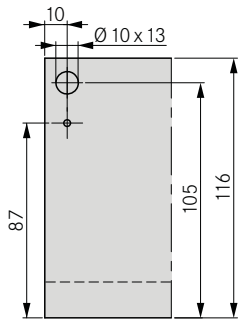

Cutting dimensions for 16 mm chipboard

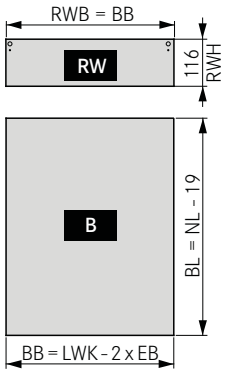

Slide

S	16/19	18
EB	29	30
A	21.5	22.5

Note: Slide available in two versions: For S16/S19 and S18. Refer to the Slides section (from page 32).

Fixing positions for full extension slide

Euro screw Ø 6 x 13 mm

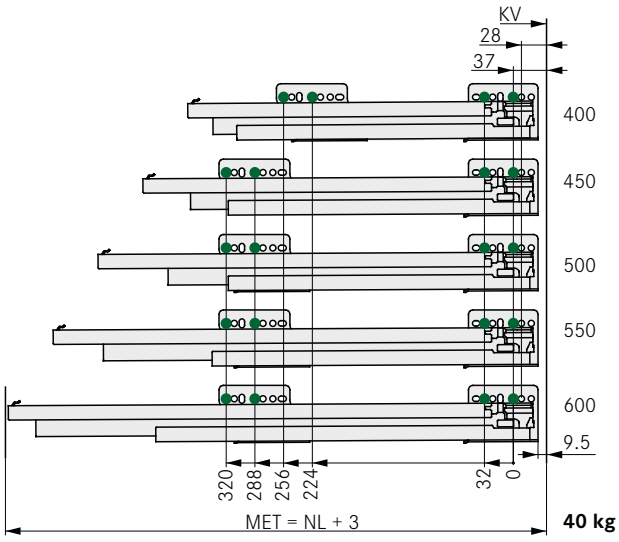

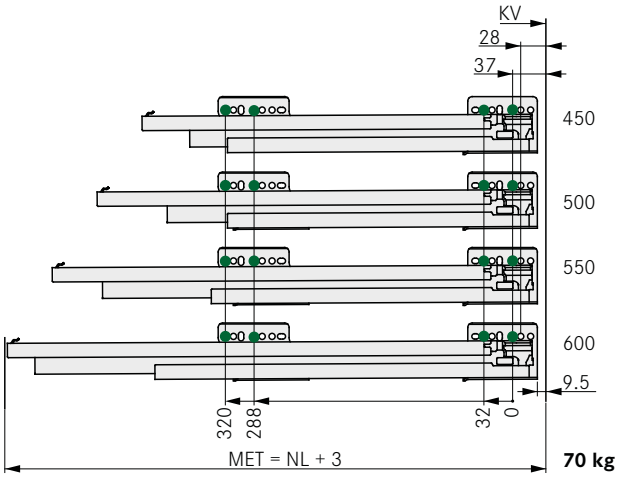

LEGEND

B	Bottom panel
BB / BL	Bottom width / Bottom length
EB	Construction width
FAS	Front overlay, side
FST	Front overlay
KV	Front edge of cabinet
LWK	Inside cabinet width
MET	Minimum installation depth
NL	Nominal length
RW	Back panel
RWB	Width of back panel
RWH	Height of back panel

NOVA PRO SCALA
High drawer H186

- Slim, closed drawer side
- High stability up to a front height of 780 mm
- Can be personalised with designer panels
- Integrated height, side and tilt angle adjustment
- Optimum use of space due to straight inside surfaces and low construction width
- Tool-free installation and removal of the front
- Width of bottom and back panel is the same
- Bottom panel machining not required

Packaging unit (PU):
123 = 100 items in PE
201 = 1 item in cardboard box (smallest PU = 10 units)
211 = 20 items in a cardboard box
247 = 1000 items in a cardboard box
250 = 1500 items in a cardboard box
547 = 1000 items in PE in a cardboard box

ORDER INFORMATION

1 Nova Pro Scala drawer sides H186
Set: One left, one right

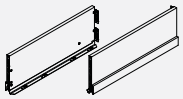

NL	Stone				Ice				Silver			
	Item No.	PU			Item No.	PU			Item No.	PU		
270	F100103300	201	211		F100103327	201	211		F100103354	201	211	
300	F100103303	201	211		F100103330	201	211		F100103357	201	211	
350	F100103306	201	211		F100103333	201	211		F100103360	201	211	
400	F100103309	201	211		F100103336	201	211		F100103363	201	211	
450	F100103312	201	211		F100103339	201	211		F100103366	201	211	
500	F100103315	201	211		F100103342	201	211		F100103369	201	211	
550	F100103318	201	211		F100103345	201	211		F100103372	201	211	
600	F100103321	201	211		F100103348	201	211		F100103375	201	211	
650	F100103324	201	211		F100103351	201	211		F100103378	201	211	

2 Installation hook
Single item: Can be used on left/right

	Description	Item No.	PU		
32 mm	Expansion dowel	F102117719	123	547	
50 mm	Expansion dowel	F102117720	123	547	
32 mm	For press fitting	F102021854	123		250
50 mm	For press fitting	F102021153	123		250
	For screw fixing	F102021855	123	547	

3 Front clip
Single item: Can be used on left/right

	Description	Item No.	PU		
32 mm	Expansion dowel	F102104835	123	247	
32 mm	For press fitting	F102104834	123	247	
32 mm	For screw fixing	F102104833	123	247	

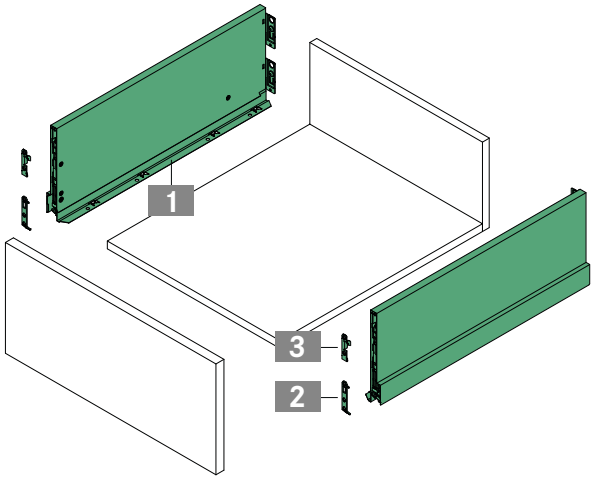

PAGE REFERENCES

Slides	32	Designer panels	58	Sensomatic	73
Inset panels	42	Accessories	60	Organising systems	95
Steel back panels	56	Technical information	66	Assembly technology	120

handlie.com

PLANNING DIMENSIONS

All dimensions in millimetres

Front installation dimensions

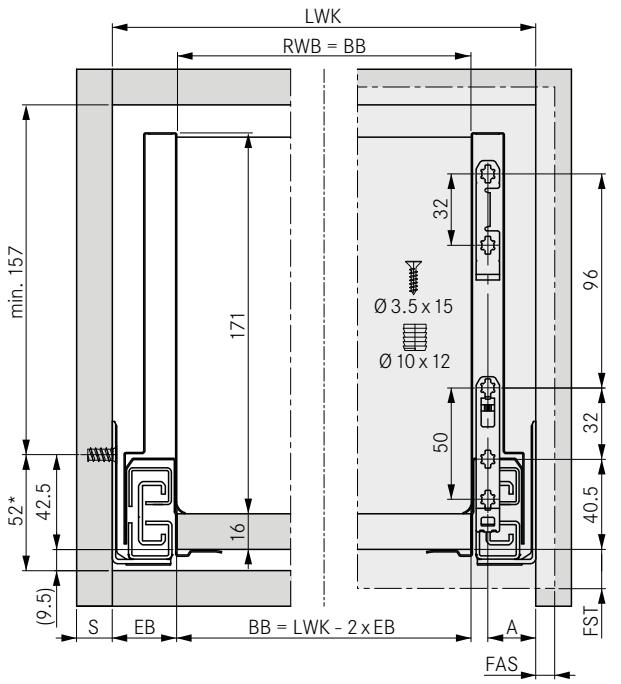

* Recommendation/Minimum dimension: 49.5 mm/Tipmatic Soft-close: 58 mm

Back panel installation dimensions

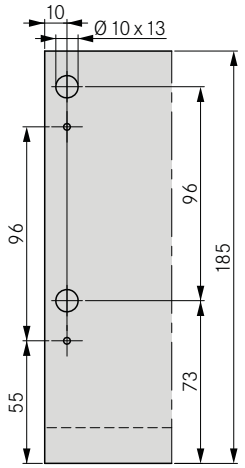

Cutting dimensions for 16 mm chipboard

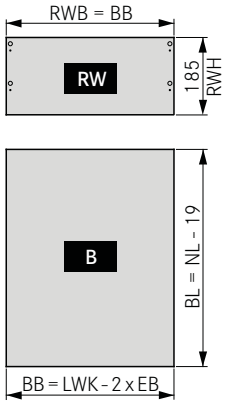

Slide

S	16/19	18
EB	29	30
A	21.5	22.5

Note: Slide available in two versions: For S16/S19 and S18. Refer to the Slides section (from page 32).

Fixing positions for full extension slide

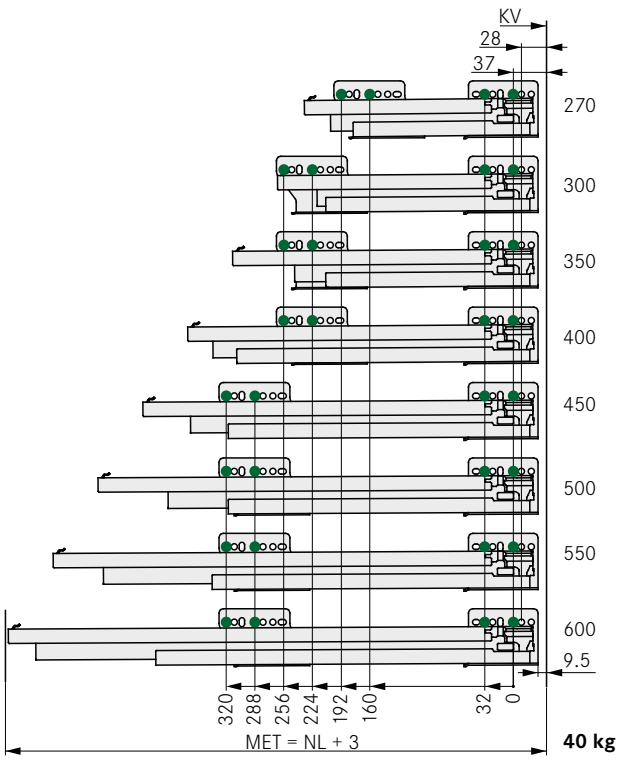

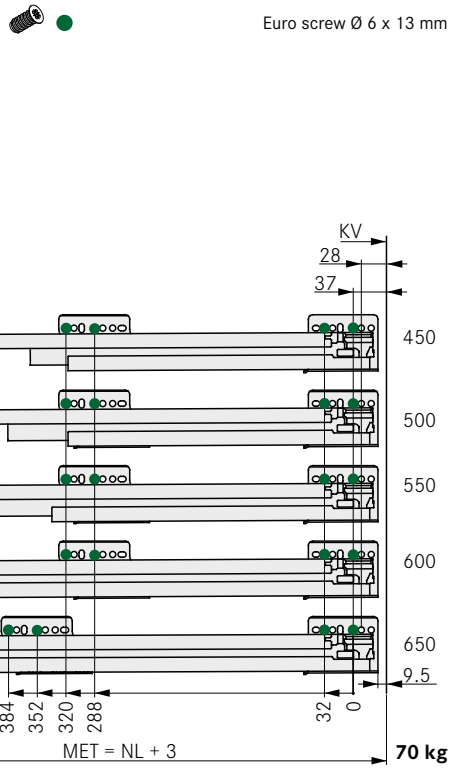

LEGEND

B	Bottom panel
BB / BL	Bottom width / Bottom length
EB	Construction width
FAS	Front overlay, side
FST	Front overlay
KV	Front edge of cabinet
LWK	Inside cabinet width
MET	Minimum installation depth
NL	Nominal length
RW	Back panel
RWB	Width of back panel
RWH	Height of back panel

NOVA PRO SCALA

Pot drawer H90 with rectangular railing

- Snug-fitting rectangular railing
- Flush-fitting back panel adapter
- Minimum plastic parts
- Integrated height and side adjustment
- Tilt angle adjustment using railing
- Optimum use of space due to straight inside surfaces and low construction width
- Tool-free installation and removal of the front
- Width of bottom and back panel is the same
- Bottom panel machining not required

Packaging unit (PU):
123 = 100 items in PE
201 = 1 item in cardboard box (smallest PU = 10 units)
211 = 20 items in a cardboard box
228 = 150 items in a cardboard box
250 = 1500 items in a cardboard box
507 = 10 items in PE in a cardboard box
547 = 1000 items in PE in a cardboard box

ORDER INFORMATION

1 Nova Pro Scala drawer sides H90
Set: One left, one right

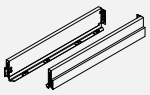

NL	Stone				Ice				Silver			
	Item No.	PU			Item No.	PU			Item No.	PU		
270	F100103108	201	211		F100103135	201	211		F100103162	201	211	
300	F100103111	201	211		F100103138	201	211		F100103165	201	211	
350	F100103114	201	211		F100103141	201	211		F100103168	201	211	
400	F100103117	201	211		F100103144	201	211		F100103171	201	211	
450	F100103120	201	211	228	F100103147	201	211	228	F100103174	201	211	228
500	F100103123	201	211	228	F100103150	201	211	228	F100103177	201	211	228
550	F100103126	201	211		F100103153	201	211		F100103180	201	211	
600	F100103129	201	211		F100103156	201	211		F100103183	201	211	
650	F100103132	201	211		F100103159	201	211		F100103186	201	211	

2 Rectangular railing, screw-on, for wooden back panel
Set: Railing, railing bracket (front/back) and cover cap, one of each left/right

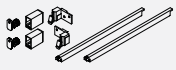

NL	Stone				Ice				Silver			
	Item No.	PU			Item No.	PU			Item No.	PU		
270	F102103516	507			F102103525	507			F102103534	507		
300	F102103517	507			F102103526	507			F102103535	507		
350	F102103518	507			F102103527	507			F102103536	507		
400	F102103519	507			F102103528	507			F102103537	507		
450	F102103520	507			F102103529	507			F102103538	507		
500	F102103521	507			F102103530	507			F102103539	507		
550	F102103522	507			F102103531	507			F102103540	507		
600	F102103523	507			F102103532	507			F102103541	507		
650	F102103524	507			F102103533	507			F102103542	507		

3 Installation hook
Single item: Can be used on left/right

	Description	Item No.	PU		
32 mm	Expansion dowel	F102117719	123	547	
50 mm	Expansion dowel	F102117720	123	547	
32 mm	For press fitting	F102021854	123		250
50 mm	For press fitting	F102021153	123		250
	For screw fixing	F102021855	123	547	

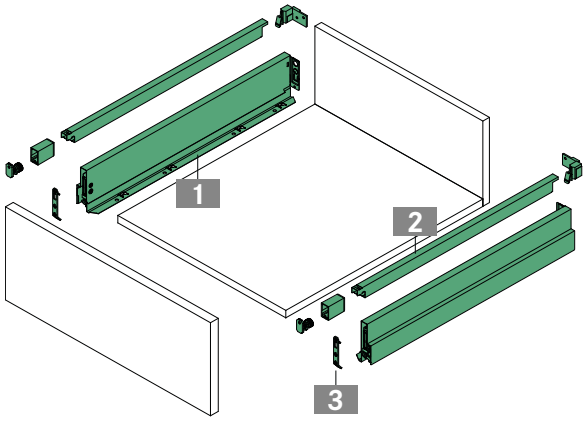

PAGE REFERENCES

Slides	32	Steel back panels	56	Technical information	66
Inset panels	42	Designer panels	58	Sensomatic	73
Individual components	52	Accessories	60	Organising systems	95

handlie.com

PLANNING DIMENSIONS

All dimensions in millimetres

Front installation dimensions

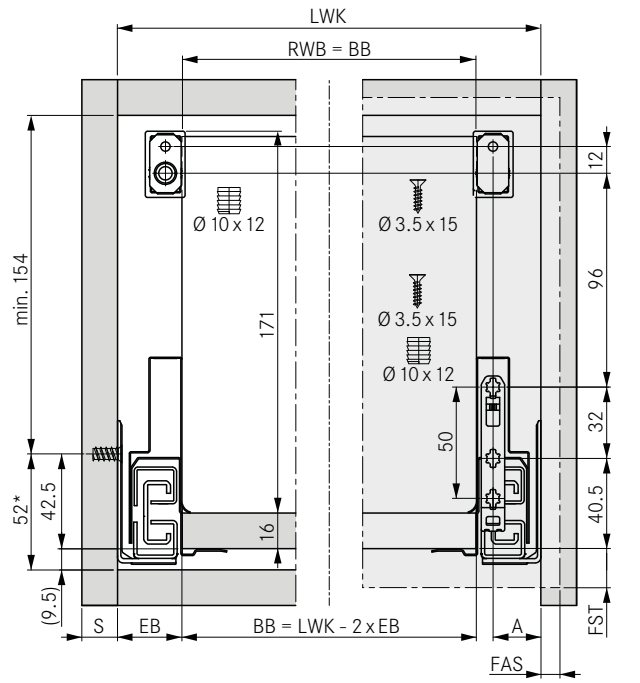

* Recommendation/Minimum dimension: 49.5 mm/Tipmatic Soft-close: 58 mm

Back panel installation dimensions

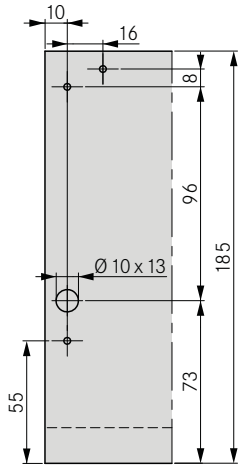

Cutting dimensions for 16 mm chipboard

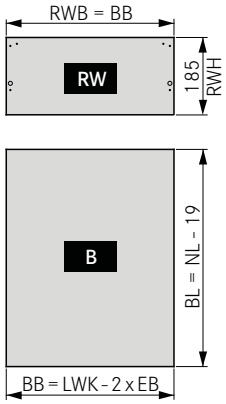

Slide

S	16/19	18
EB	29	30
A	21.5	22.5

Note: Slide available in two versions: For S16/S19 and S18. Refer to the Slides section (from page 32).

Fixing positions for full extension slide

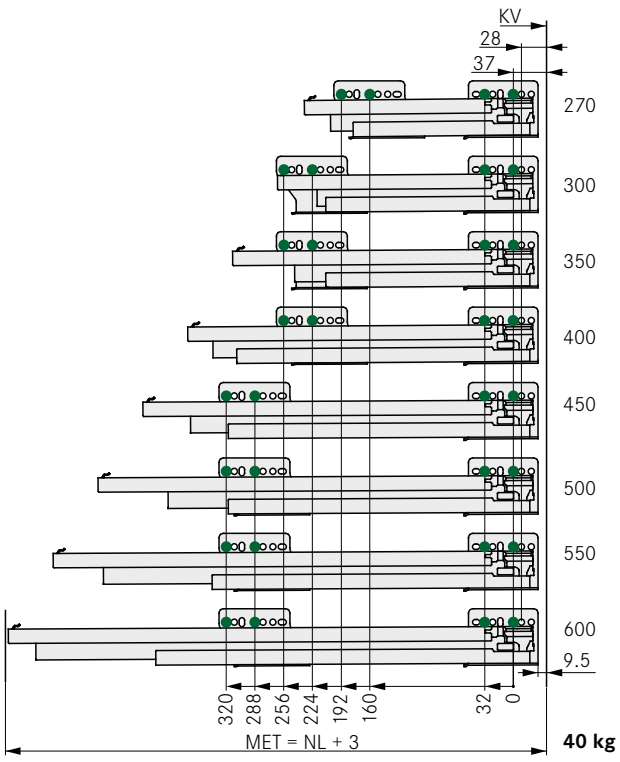

Euro screw Ø 6 x 13 mm

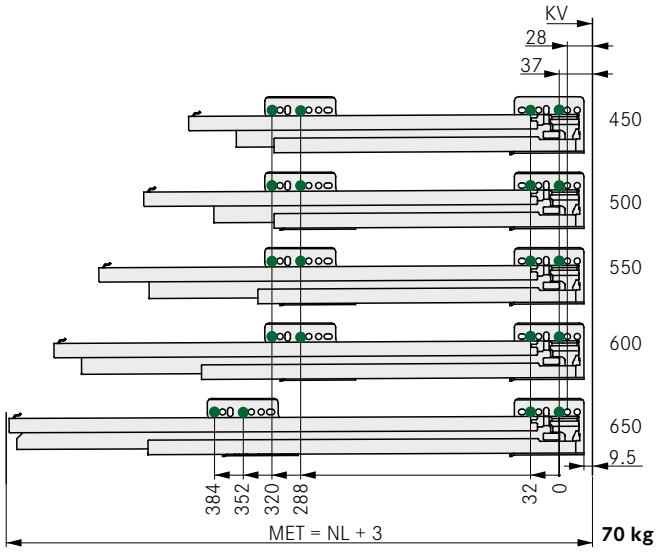

LEGEND

B	Bottom panel
BB / BL	Bottom width / Bottom length
EB	Construction width
FAS	Front overlay, side
FST	Front overlay
KV	Front edge of cabinet
LWK	Inside cabinet width
MET	Minimum installation depth
NL	Nominal length
RW	Back panel
RWB	Width of back panel
RWH	Height of back panel

NOVA PRO SCALA

Pot drawer H90 with rectangular railing and front support

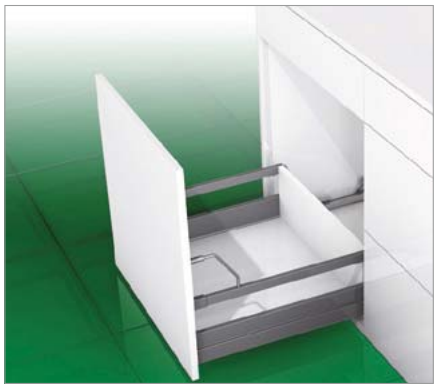

- Additional fixing points for optimum stability with extra-high fronts
- Flush-fitting back panel adapter
- Integrated height and side adjustment
- Tilt angle adjustment using railing and front support
- Optimum use of space due to straight inside surfaces and low construction width
- Tool-free installation and removal of the front
- Width of bottom and back panel is the same
- Bottom panel machining not required

Packaging unit (PU):
123 = 100 items in PE
201 = 1 item in cardboard box (smallest PU = 10 units)
211 = 20 items in a cardboard box
228 = 150 items in a cardboard box
250 = 1500 items in a cardboard box
507 = 10 items in PE in a cardboard box
547 = 1000 items in PE in a cardboard box

ORDER INFORMATION

1 Nova Pro Scala drawer sides H90
Set: One left, one right

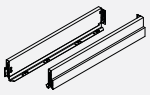

NL	Stone				Ice				Silver			
	Item No.	PU			Item No.	PU			Item No.	PU		
400	F100103117	201	211		F100103144	201	211		F100103171	201	211	
450	F100103120	201	211	228	F100103147	201	211	228	F100103174	201	211	228
500	F100103123	201	211	228	F100103150	201	211	228	F100103177	201	211	228
550	F100103126	201	211		F100103153	201	211		F100103180	201	211	
600	F100103129	201	211		F100103156	201	211		F100103183	201	211	
650	F100103132	201	211		F100103159	201	211		F100103186	201	211	

2 Rectangular railing with front support, screw-on, for wooden back panel
Set: Railing, railing bracket (front/back) and cover cap, one of each left/right

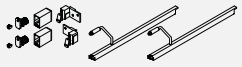

NL	Stone				Ice				Silver			
	Item No.	PU			Item No.	PU			Item No.	PU		
400	F102103555	507			F102103564	507			F102103573	507		
450	F102103556	507			F102103565	507			F102103574	507		
500	F102103557	507			F102103566	507			F102103575	507		
550	F102103558	507			F102103567	507			F102103576	507		
600*	F102103559	507			F102103568	507			F102103577	507		
650*	F102103560	507			F102103569	507			F102103578	507		

* upon request

3 Installation hook
Single item: Can be used on left/right

	Description	Item No.	PU		
32 mm	Expansion dowel	F102117719	123	547	
50 mm	Expansion dowel	F102117720	123	547	
32 mm	For press fitting	F102021854	123		250
50 mm	For press fitting	F102021153	123		250
	For screw fixing	F102021855	123	547	

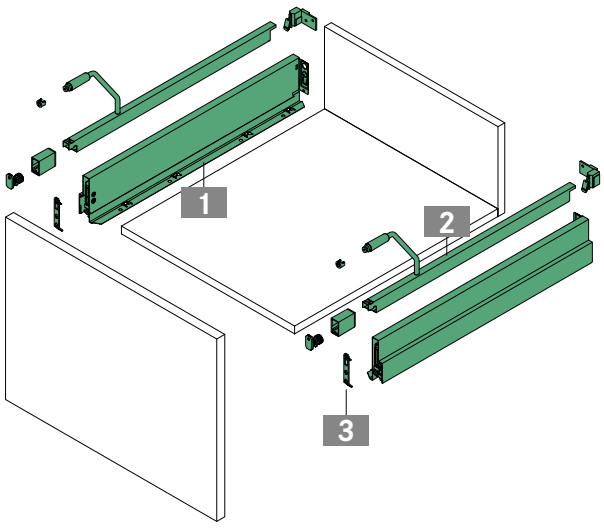

PAGE REFERENCES

Slides	32	Designer panels	58	Sensomatic	73
Inset panels	42	Accessories	60	Organising systems	95
Steel back panels	56	Technical information	66	Assembly technology	120

handlie.com

PLANNING DIMENSIONS

All dimensions in millimetres

Front installation dimensions

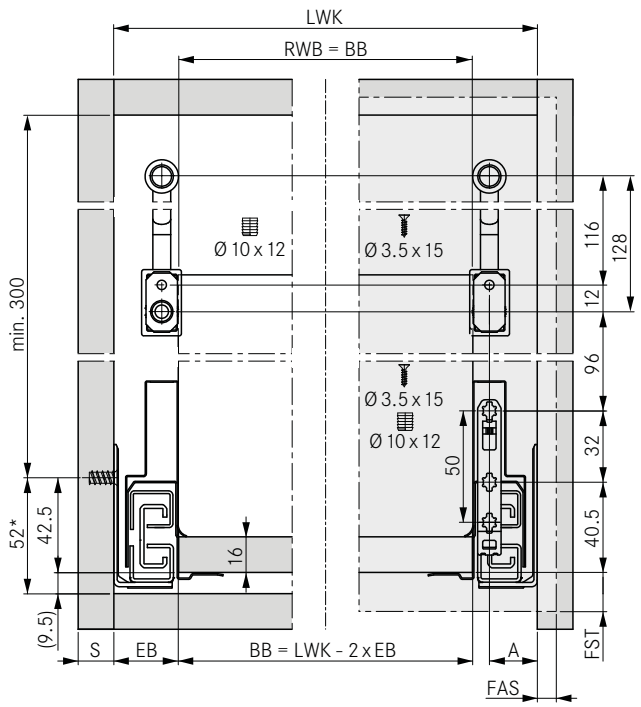

* Recommendation/Minimum dimension: 49.5 mm/Tipmatic Soft-close: 58 mm

Back panel installation dimensions

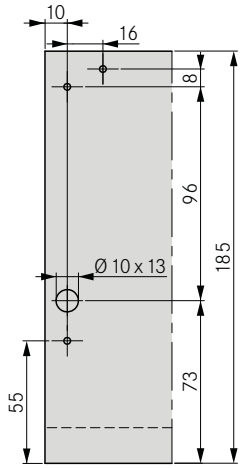

Cutting dimensions for 16 mm chipboard

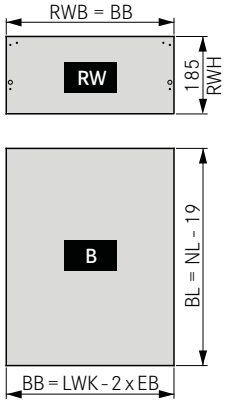

Slide

S	16/19	18
EB	29	30
A	21.5	22.5

Note: Slide available in two versions: For S16/S19 and S18. Refer to the Slides section (from page 32).

Fixing positions for full extension slide

Euro screw Ø 6 x 13 mm

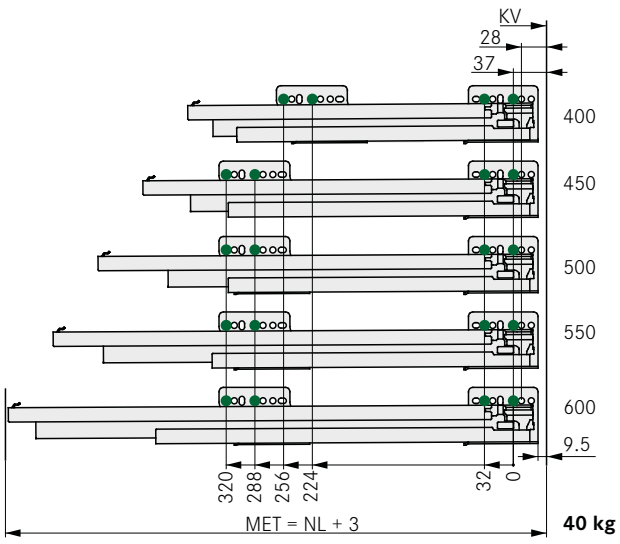

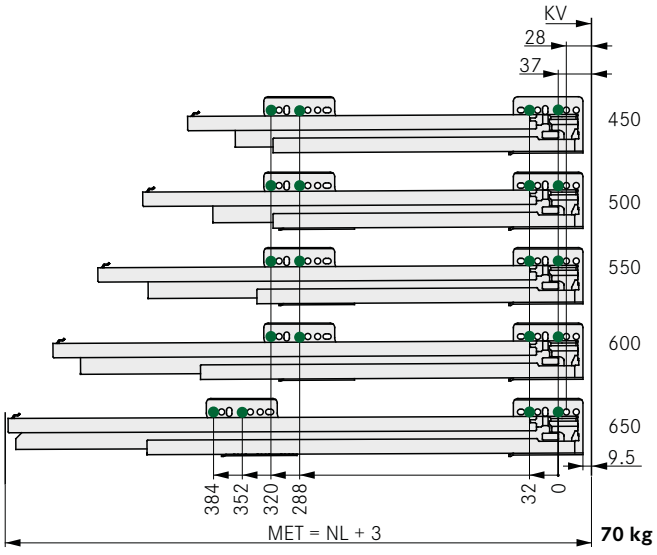

LEGEND

B	Bottom panel
BB / BL	Bottom width / Bottom length
EB	Construction width
FAS	Front overlay, side
FST	Front overlay
KV	Front edge of cabinet
LWK	Inside cabinet width
MET	Minimum installation depth
NL	Nominal length
RW	Back panel
RWB	Width of back panel
RWH	Height of back panel

NOVA PRO SCALA CRYSTAL

Pot drawer for slide-in elements height 94 mm

- No processing of the slide-in elements necessary
- High level of stability, also without front and slide-in elements
- Elegant, steel covered glass clips
- Integrated height, side and tilt angle adjustment
- Optimum use of space due to straight inside surfaces and low construction width
- Tool-free installation and removal of the front
- Width of bottom and back panel is the same
- Bottom panel machining not required

Packaging unit (PU):
123 = 100 items in PE
201 = 1 item in cardboard box (smallest PU = 10 units)
211 = 20 items in a cardboard box
247 = 1000 items in a cardboard box
250 = 1500 items in a cardboard box
507 = 10 items in PE in a cardboard box
547 = 1000 items in PE in a cardboard box

Note:
When using glass slide-in elements we recommend using single pane safety glass and refer to national and international safety standards.

ORDER INFORMATION

1 Nova Pro Scala Crystal drawer sides H90
Set: One left, one right

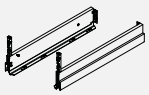

NL	Stone				Ice				Silver			
	Item No.	PU			Item No.	PU			Item No.	PU		
270	F100103408	201	211		F100103435	201	211		F100103462	201	211	
300	F100103411	201	211		F100103438	201	211		F100103465	201	211	
350	F100103414	201	211		F100103441	201	211		F100103468	201	211	
400	F100103417	201	211		F100103444	201	211		F100103471	201	211	
450	F100103420	201	211		F100103447	201	211		F100103474	201	211	
500	F100103423	201	211		F100103450	201	211		F100103477	201	211	
550	F100103426	201	211		F100103453	201	211		F100103480	201	211	
600	F100103429	201	211		F100103456	201	211		F100103483	201	211	
650	F100103432	201	211		F100103459	201	211		F100103486	201	211	

2 Nova Pro Scala Crystal fixture for wooden back panel
Set: Glass clip (front/back), one on left/right

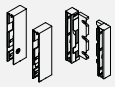

	Stone				Ice				Silver			
	Item No.	PU			Item No.	PU			Item No.	PU		
	F102104836	507			F102104843	507			F102104850	507		

3 Installation hook
Single item: Can be used on left/right

	Description	Item No.	PU		
32 mm	Expansion dowel	F102117719	123	547	
50 mm	Expansion dowel	F102117720	123	547	
32 mm	For press fitting	F102021854	123		250
50 mm	For press fitting	F102021153	123		250
	For screw fixing	F102021855	123	547	

4 Front clip
Single item: Can be used on left/right

	Description	Item No.	PU		
32 mm	Expansion dowel	F102104835	123	247	
32 mm	For press fitting	F102104834	123	247	
32 mm	For screw fixing	F102104833	123	247	

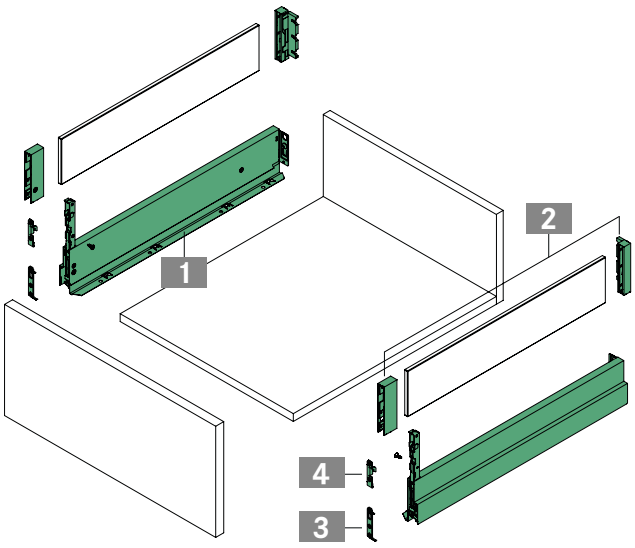

PAGE REFERENCES

Slides	32	Individual components	54	Sensomatic	73
Inset panels	42	Accessories	60	Organising systems	95
Steel back panels	56	Technical information	66	Assembly technology	120

handlie.com

PLANNING DIMENSIONS

All dimensions in millimetres

Front installation dimensions

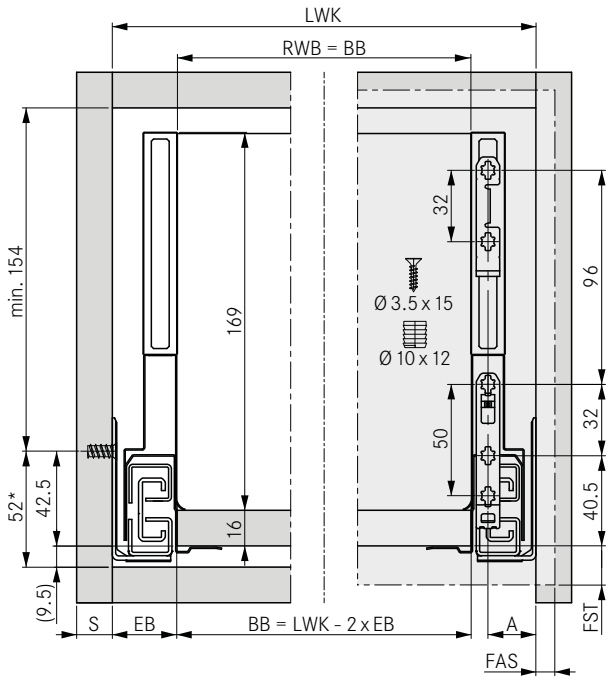

* Recommendation/Minimum dimension: 49.5 mm/Tipmatic Soft-close: 58 mm

Back panel installation dimensions

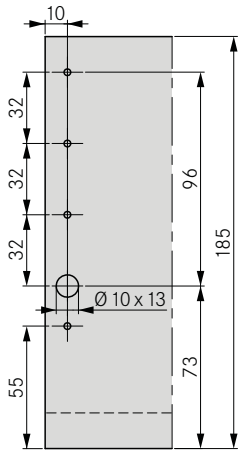

Cutting dimensions for 16 mm chipboard

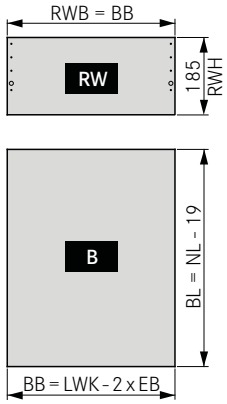

Slide

S	16/19	18
EB	29	30
A	21.5	22.5

Note: Slide available in two versions: For S16/S19 and S18. Refer to the Slides section (from page 32).

Slide-in element cutting dimensions

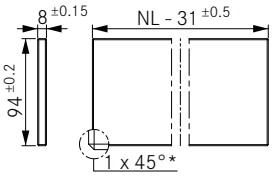

* Glass slide-in element

Fixing positions for full extension slide

Euro screw Ø 6 x 13 mm

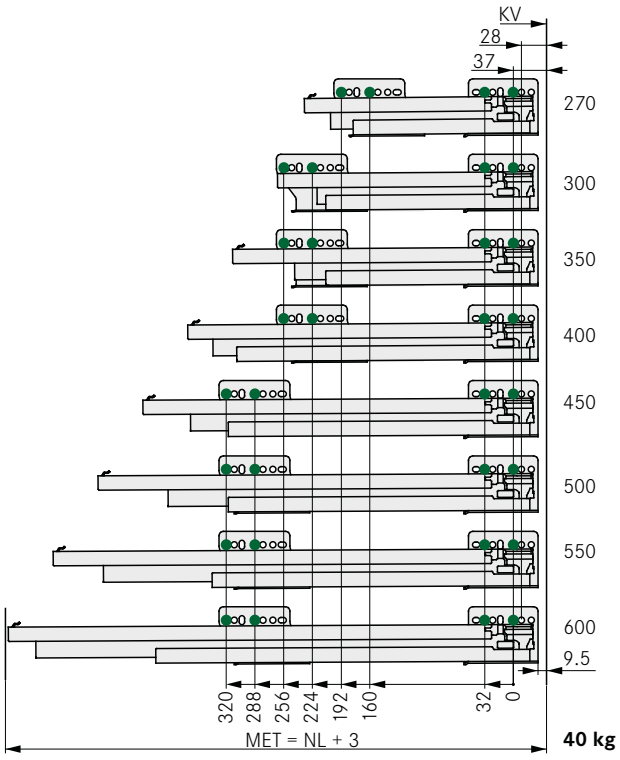

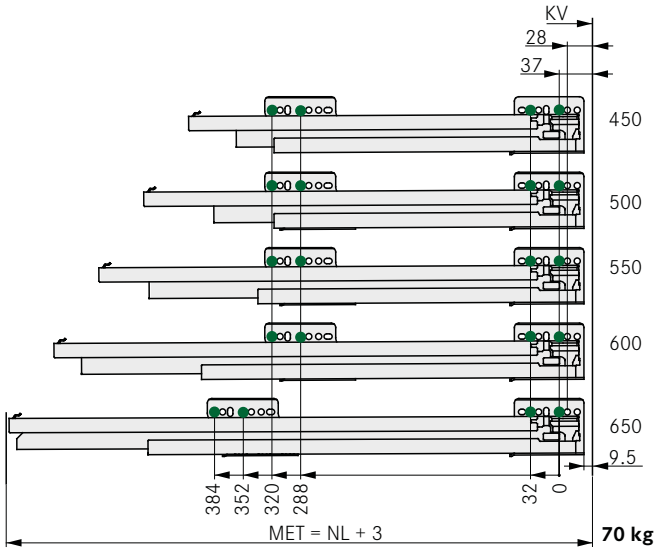

LEGEND

B	Bottom panel
BB / BL	Bottom width / Bottom length
EB	Construction width
FAS	Front overlay, side
FST	Front overlay
KV	Front edge of cabinet
LWK	Inside cabinet width
MET	Minimum installation depth
NL	Nominal length
RW	Back panel
RWB	Width of back panel
RWH	Height of back panel

NOVA PRO SCALA CRYSTAL PLUS

Frame drawer for large slide-in elements, height 140 mm

- No processing of the slide-in elements necessary
- Patented clip technology makes it easy to slide the elements in
- No additional cover caps
- High level of stability, also without front and slide-in elements
- Integrated height, side and tilt angle adjustment
- Optimum use of space due to straight inside surfaces and low construction width
- Tool-free installation and removal of the front

Packaging unit (PU):
123 = 100 items in PE
201 = 1 item in cardboard box (smallest PU = 10 units)
211 = 20 items in a cardboard box
247 = 1000 items in a cardboard box
250 = 1500 items in a cardboard box
547 = 1000 items in PE in a cardboard box

Note:
When using glass slide-in elements we recommend using single pane safety glass and refer to national and international safety standards.

ORDER INFORMATION

1 Nova Pro Scala Crystal Plus drawer sides
Set: One left, one right

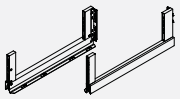

NL	Stone				Ice				Silver			
	Item No.	PU			Item No.	PU			Item No.	PU		
270	**F100**104**724**	201	211		**F100**104**751**	201	211		**F100**104**778**	201	211	
300	**F100**104**727**	201	211		**F100**104**754**	201	211		**F100**104**781**	201	211	
350	**F100**104**730**	201	211		**F100**104**757**	201	211		**F100**104**784**	201	211	
400	**F100**104**733**	201	211		**F100**104**760**	201	211		**F100**104**787**	201	211	
450	**F100**104**736**	201	211		**F100**104**763**	201	211		**F100**104**790**	201	211	
500	**F100**104**739**	201	211		**F100**104**766**	201	211		**F100**104**793**	201	211	
550	**F100**104**742**	201	211		**F100**104**769**	201	211		**F100**104**796**	201	211	
600	**F100**104**745**	201	211		**F100**104**772**	201	211		**F100**104**799**	201	211	
650	**F100**104**748**	201	211		**F100**104**775**	201	211		**F100**104**802**	201	211	

2 Installation hook
Single item: Can be used on left/right

	Description	Item No.	PU		
32 mm	Expansion dowel	**F102**117**719**	123	547	
50 mm	Expansion dowel	**F102**117**720**	123	547	
32 mm	For press fitting	**F102**021**854**	123		250
50 mm	For press fitting	**F102**021**153**	123		250
	For screw fixing	**F102**021**855**	123	547	

3 Front clip
Single item: Can be used on left/right

	Description	Item No.	PU		
32 mm	Expansion dowel	**F102**104**835**	123	247	
32 mm	For press fitting	**F102**104**834**	123	247	
32 mm	For screw fixing	**F102**104**833**	123	247	

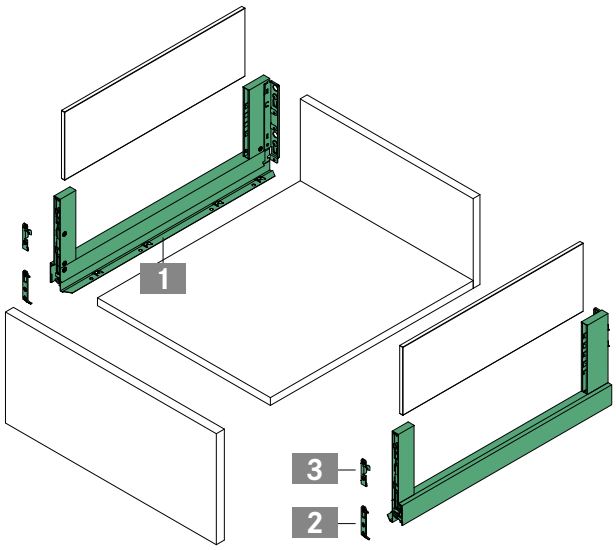

PAGE REFERENCES

Slides	32	Accessories	60	Organising systems	95
Inset panels	42	Technical information	66	Assembly technology	120
Steel back panels	56	Sensomatic	73	Assembly aids	124

handlie.com

PLANNING DIMENSIONS

All dimensions in millimetres

Front installation dimensions

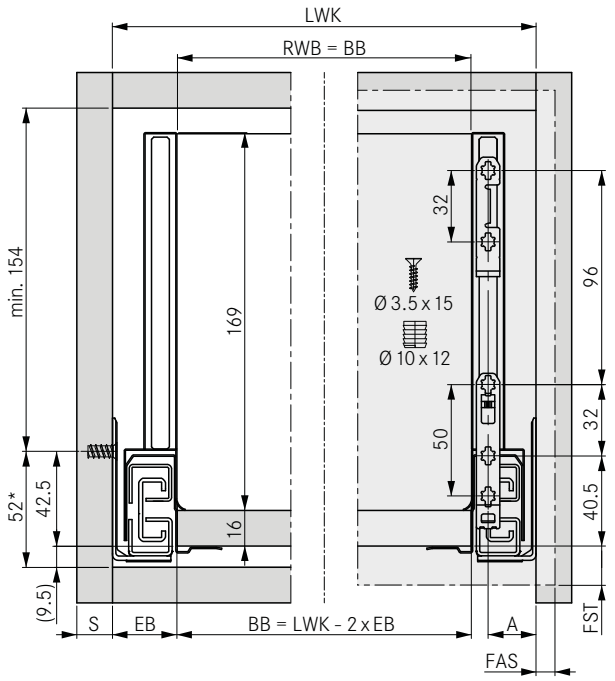

* Recommendation/Minimum dimension: 49.5 mm/Tipmatic Soft-close: 58 mm

Back panel installation dimensions

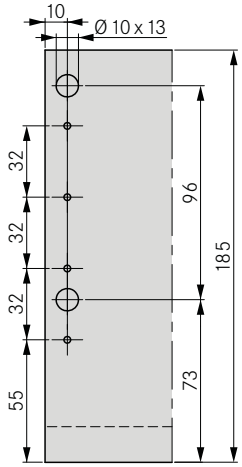

Cutting dimensions for 16 mm chipboard

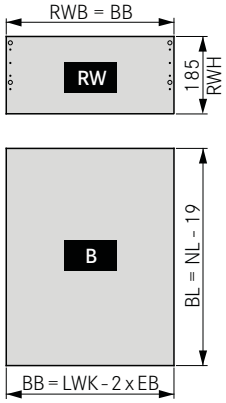

Slide

S	16/19	18
EB	29	30
A	21.5	22.5

Note: Slide available in two versions: For S16/S19 and S18. Refer to the Slides section (from page 32).

Slide-in element cutting dimensions

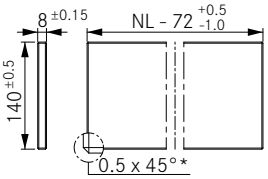

* Glass slide-in element

Fixing positions for full extension slide

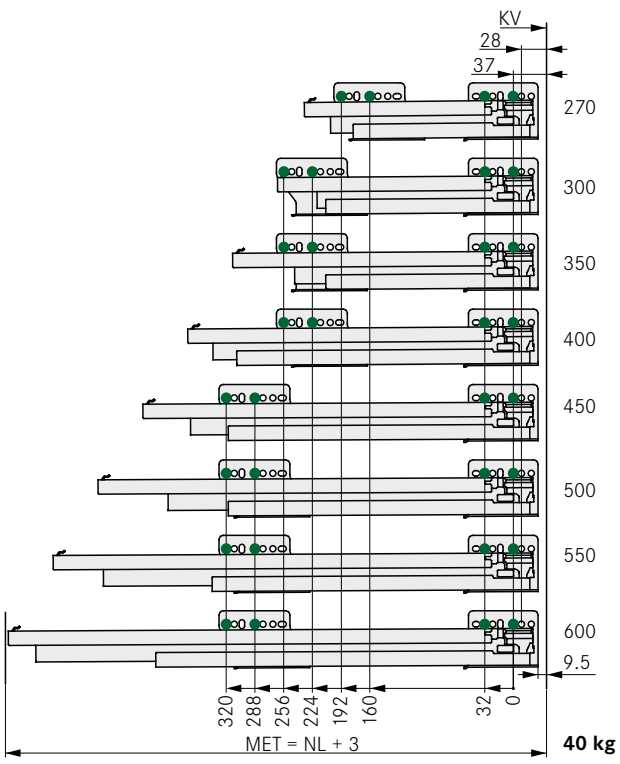

Euro screw Ø 6 x 13 mm

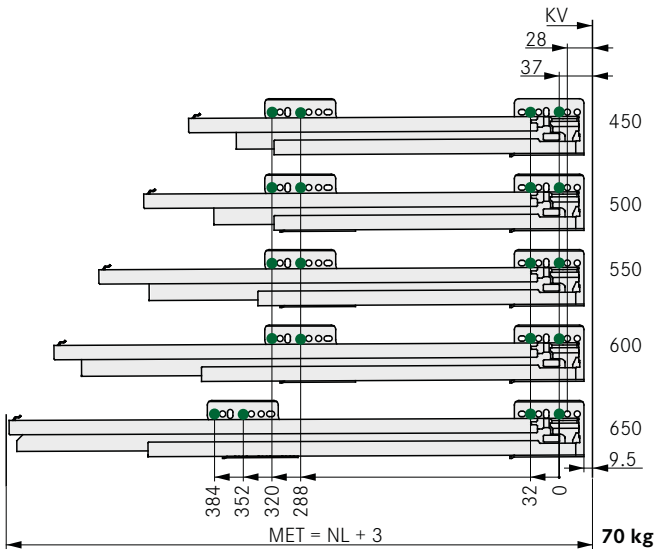

LEGEND

B	Bottom panel
BB / BL	Bottom width / Bottom length
EB	Construction width
FAS	Front overlay, side
FST	Front overlay
KV	Front edge of cabinet
LWK	Inside cabinet width
MET	Minimum installation depth
NL	Nominal length
RW	Back panel
RWB	Width of back panel
RWH	Height of back panel

NOVA PRO SOFT-CLOSE S16/S19

Full extension slide 40/70 kg

- Excellent running characteristics
- Fully-synchronised slide technology
- Soft-close damping system
- End stop damper
- Utmost lateral stability
- Minimum drawer deflection
- Suitable for all Nova Pro drawer sides

Packaging unit (PU):
211 = 20 items in a cardboard box
507 = 10 items in PE in a cardboard box

Notes:
- Used with cabinet side wall S16 and S19 mm
- Construction width 29 mm
- Refer to installation information

ORDER INFORMATION

1 **Nova Pro full extension slide Soft-close S16/S19**
Set: One left, one right

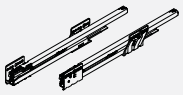

NL	40 kg				70 kg			
	Item No.	PU			Item No.	PU		
270	**F101**108**261**	507	211		–			
300	**F101**108**264**	507	211		–			
350	**F101**108**267**	507	211		–			
400	**F101**108**270**	507	211		–			
450	**F101**108**273**	507	211		**F101**108**285**	507	211	
500	**F101**108**276**	507	211		**F101**108**288**	507	211	
550	**F101**108**279**	507	211		**F101**108**291**	507	211	
600	**F101**108**282**	507	211		**F101**108**294**	507	211	
650	–				**F101**108**297**	507	211	

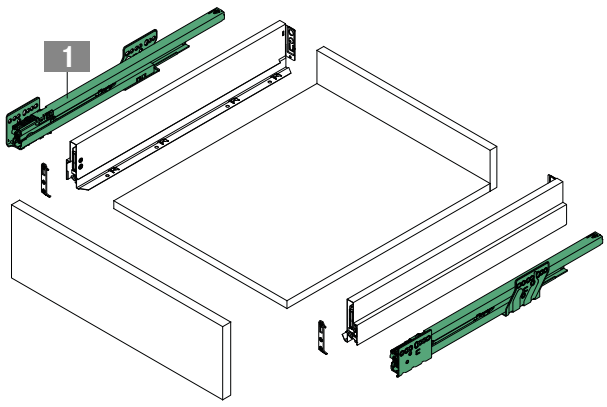

PAGE REFERENCES

Drawer sides	13	Designer panels	58	Sensomatic	73
Inset panels	42	Accessories	60	Organising systems	95
Steel back panels	56	Technical information	66	Assembly technology	120

handlie.com

PLANNING DIMENSIONS

All dimensions in millimetres

Slide installation dimensions

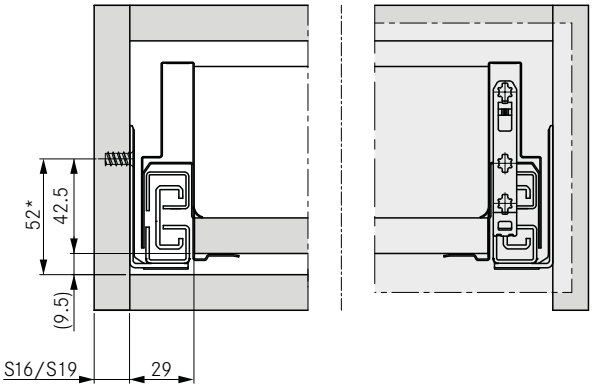

* Recommendation/Minimum dimension: 49.5 mm/Tipmatic Soft-close: 58 mm

Fixing positions for full extension slide

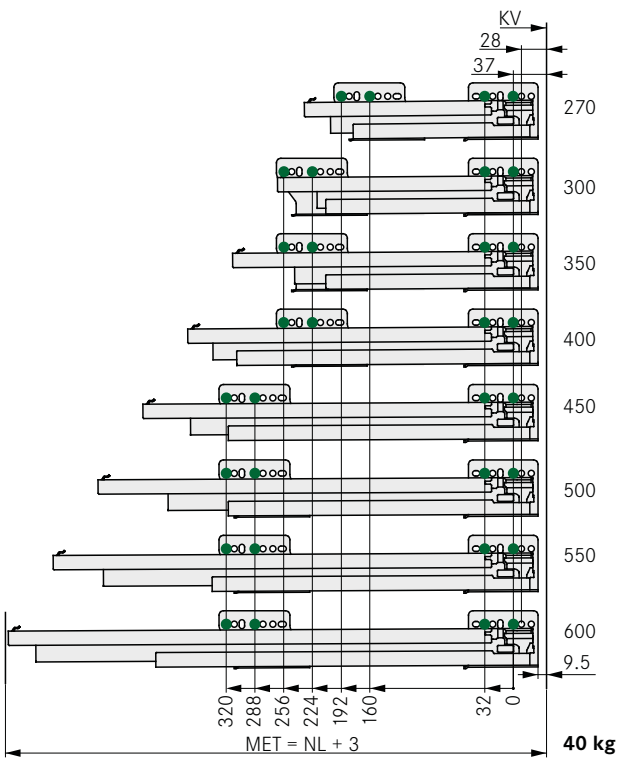

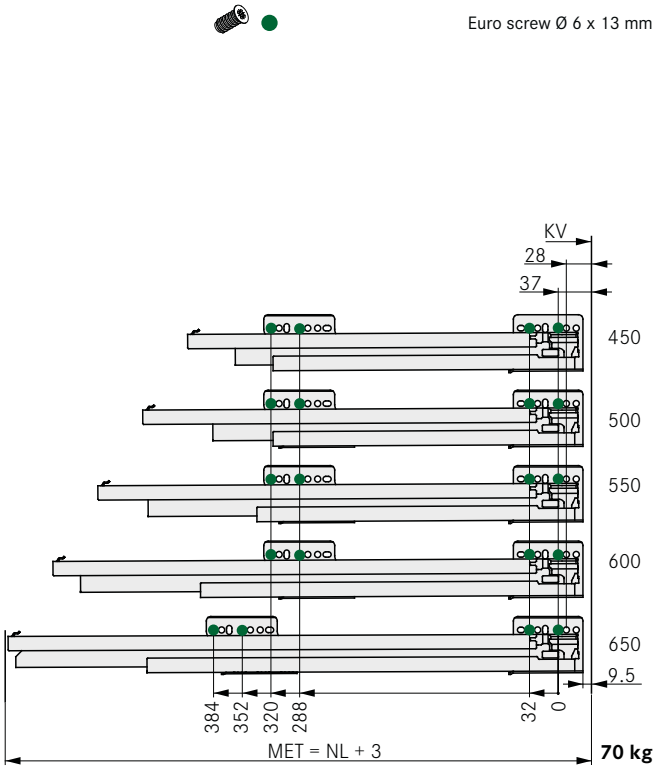

LEGEND

KV	Front edge of cabinet
MET	Minimum installation depth
NL	Nominal length
S	Cabinet side wall

NOVA PRO SOFT-CLOSE S18

Full extension slide 40/70 kg

- Excellent running characteristics
- Fully-synchronised slide technology
- Soft-close damping system
- End stop damper
- Utmost lateral stability
- Minimum drawer deflection
- Suitable for all Nova Pro drawer sides

Packaging unit (PU):
211 = 20 items in a cardboard box
507 = 10 items in PE in a cardboard box

Notes:
- Used with cabinet side wall S18 mm
- Construction width 30 mm
- Refer to installation information

ORDER INFORMATION

1 **Nova Pro full extension slide Soft-close S18**
Set: One left, one right

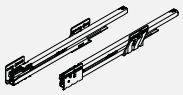

NL	40 kg				70 kg			
	Item No.	PU			Item No.	PU		
270	**F101**108**450**	507	211		–			
300	**F101**108**453**	507	211		–			
350	**F101**108**456**	507	211		–			
400	**F101**108**459**	507	211		–			
450	**F101**108**462**	507	211		**F101**108**474**	507	211	
500	**F101**108**465**	507	211		**F101**108**477**	507	211	
550	**F101**108**468**	507	211		**F101**108**480**	507	211	
600	**F101**108**471**	507	211		**F101**108**483**	507	211	
650	–				**F101**108**486**	507	211	

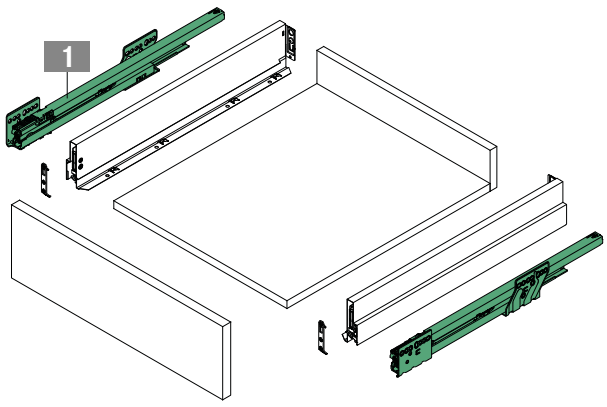

PAGE REFERENCES

Drawer sides	13	Designer panels	58	Sensomatic	73
Inset panels	42	Accessories	60	Organising systems	95
Steel back panels	56	Technical information	66	Assembly technology	120

handlie.com

PLANNING DIMENSIONS

All dimensions in millimetres

Slide installation dimensions

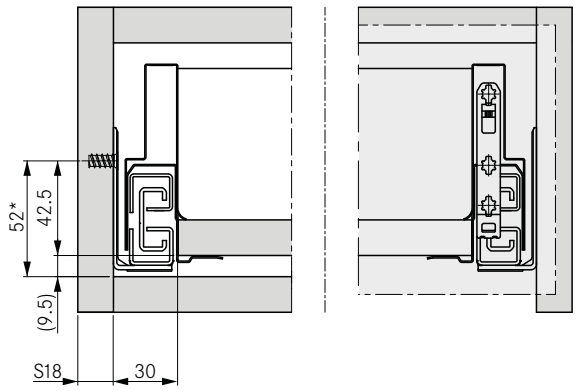

* Recommendation/Minimum dimension: 49.5 mm/Tipmatic Soft-close: 58 mm

Fixing positions for full extension slide

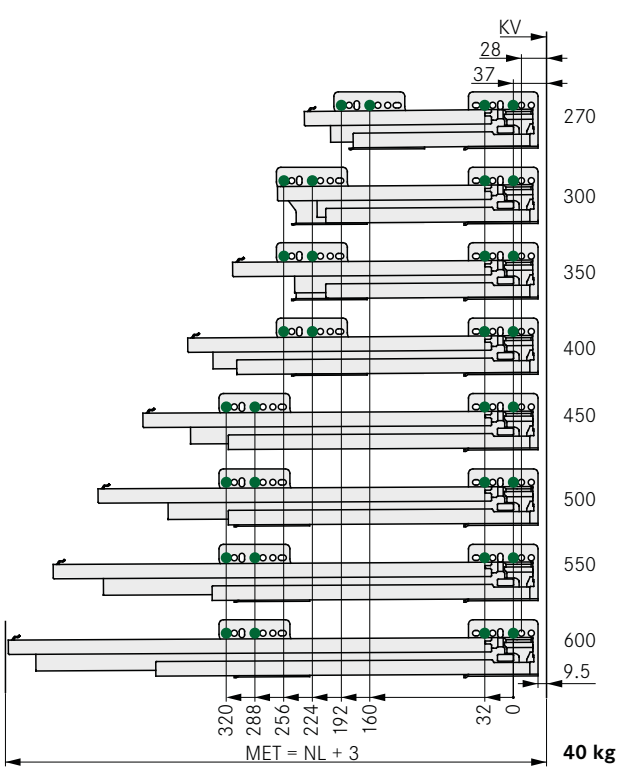

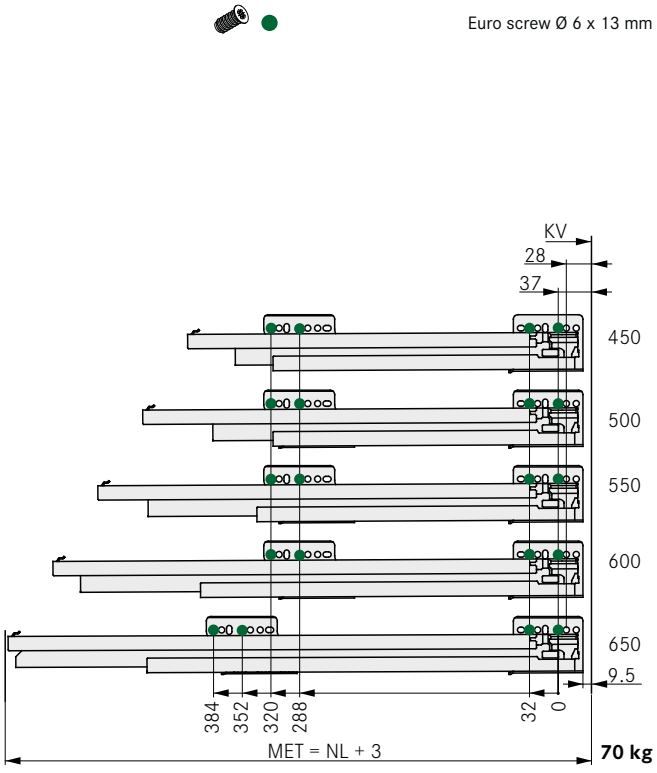

LEGEND

KV	Front edge of cabinet
MET	Minimum installation depth
NL	Nominal length
S	Cabinet side wall

NOVA PRO TIPMATIC SOFT-CLOSE S16/S19

Full extension slide 40/70 kg

- Mechanical opening system for handle-free fronts
- Combines Tipmatic function with Soft-close damping
- Simple assembly of the Tipmatic Soft-close unit
- Can be used for Nova Pro Soft-close full extension slides
- One unit for all nominal lengths and weight classes
- 3-stage adjustment of the opening force
- Large activation area with the synchronisation rod

Packaging unit (PU):
207 = 10 items in a cardboard box
211 = 20 items in a cardboard box
213 = 25 items in a cardboard box
223 = 100 items in a cardboard box
507 = 10 items in PE in a cardboard box
607 = 10 items in a cardboard box

Notes:
- Used with cabinet side wall S16 and S19 mm
- Construction width 29 mm
- Refer to installation information

ORDER INFORMATION

1 Nova Pro full extension slide Soft-close S16/S19
Set: one left, one right

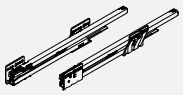

NL	40 kg				70 kg			
	Item No.	PU			Item No.	PU		
270*	**F101**108**261**	507	211		–			
300	**F101**108**264**	507	211		–			
350	**F101**108**267**	507	211		–			
400	**F101**108**270**	507	211		–			
450	**F101**108**273**	507	211		**F101**108**285**	507	211	
500	**F101**108**276**	507	211		**F101**108**288**	507	211	
550	**F101**108**279**	507	211		**F101**108**291**	507	211	
600	**F101**108**282**	507	211		**F101**108**294**	507	211	
650	–				**F101**108**297**	507	211	

* Tipmatic Soft-close not possible with a steel back panel

2 Nova Pro Tipmatic Soft-close
Set: unit and activator, one on each side left/right

Description	Item No.	PU		
For screw fixing	**F102**109**293**	607		

3 Synchronisation rod for Nova Pro Tipmatic Soft-close
Single item: for cutting to length

Description	Item No.	PU		
Length: 962 mm	**F102**109**393**	207		

4 Support for synchronisation rod
Single item: for screw fixing

Description	Item No.	PU		
from KB 800 mm	**F102**108**021**	207	223	

Individual components

Description	Item No.	PU		
Nova Pro Tipmatic Soft-close unit Set: one left, one right	**F102**109**294**	213		
Nova Pro Tipmatic Soft-close activator Set: one left, one right	**F102**109**295**	223		

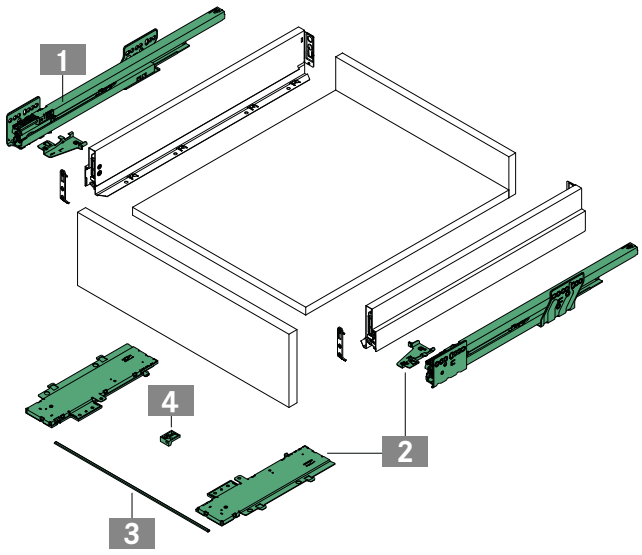

PAGE REFERENCES

Drawer sides	13	Designer panels	58	Organising systems	95
Inset panels	42	Accessories	60	Assembly technology	120
Steel back panels	56	Technical information	66	Assembly aids	124

handlie.com

PLANNING DIMENSIONS

All dimensions in millimetres

Slide installation dimensions

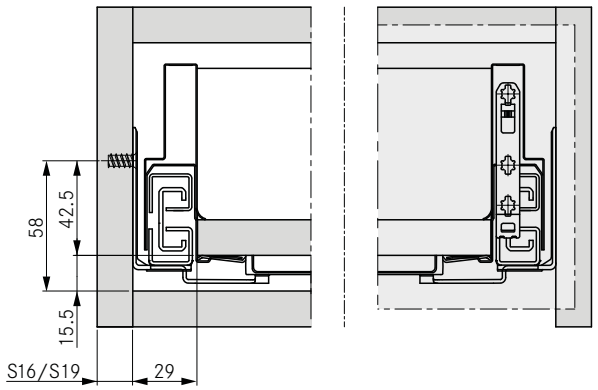

Synchronisation rod cutting dimension

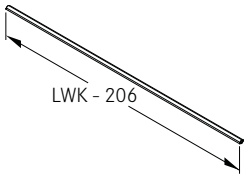

Minimum front gap

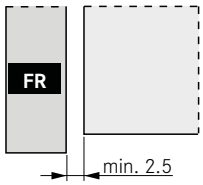

Fixing positions for full extension slide

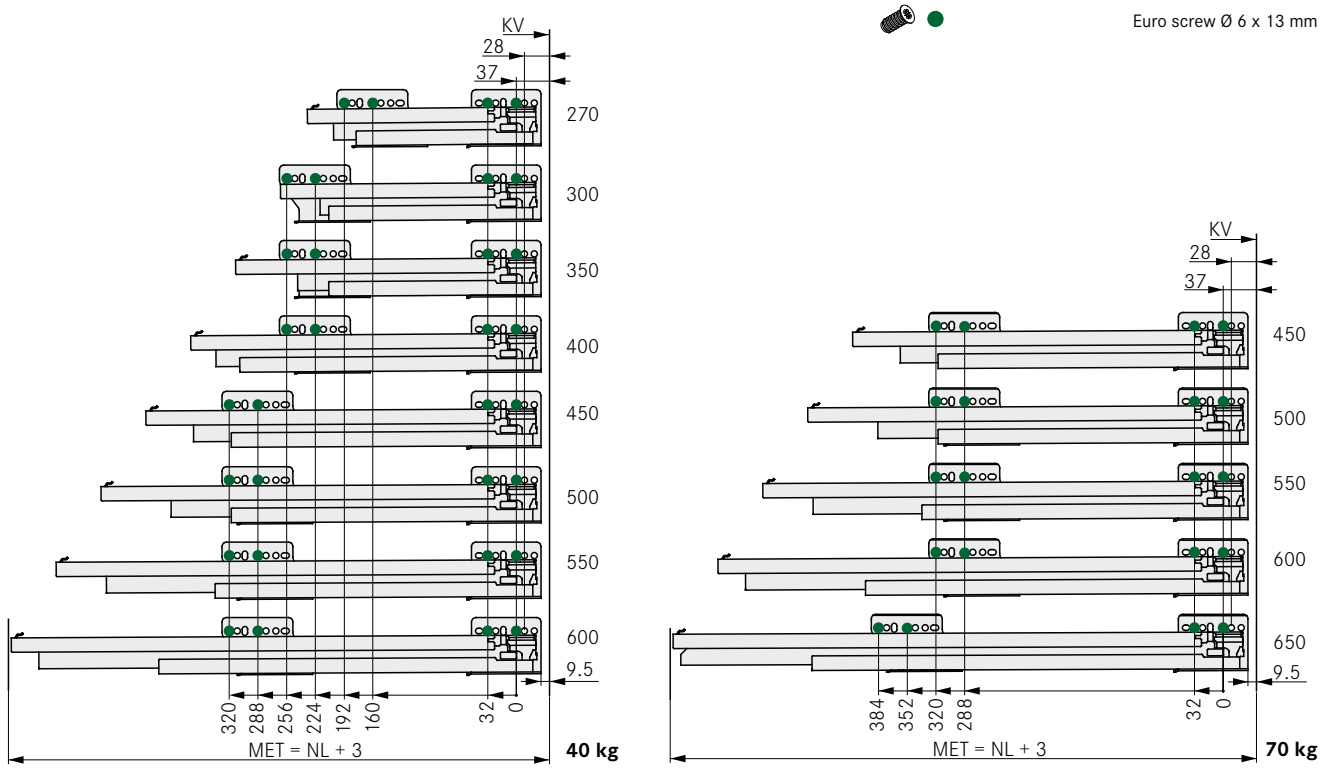

LEGEND

FR	Front
KB	Cabinet width
KV	Front edge of cabinet
LWK	Inside cabinet width

MET	Minimum installation depth
NL	Nominal length
S	Cabinet side wall

NOVA PRO TIPMATIC SOFT-CLOSE S18

Full extension slide 40/70 kg

- Mechanical opening system for handle-free fronts
- Combines Tipmatic function with Soft-close damping
- Simple assembly of the Tipmatic Soft-close unit
- Can be used for Nova Pro Soft-close full extension slides
- One unit for all nominal lengths and weight classes
- 3-stage adjustment of the opening force
- Large activation area with the synchronisation rod

Packaging unit (PU):
207 = 10 items in a cardboard box
211 = 20 items in a cardboard box
213 = 25 items in a cardboard box
223 = 100 items in a cardboard box
507 = 10 items in PE in a cardboard box
607 = 10 items in a cardboard box

Notes:
- Use with cabinet side wall S18 mm
- Construction width 30 mm
- Refer to installation information

ORDER INFORMATION

1 Nova Pro full extension slide Soft-close S18
Set: one left, one right

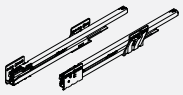

NL	40 kg				70 kg			
	Item No.	PU			Item No.	PU		
270*	**F101**108**450**	507	211		–			
300	**F101**108**453**	507	211		–			
350	**F101**108**456**	507	211		–			
400	**F101**108**459**	507	211		–			
450	**F101**108**462**	507	211		**F101**108**474**	507	211	
500	**F101**108**465**	507	211		**F101**108**477**	507	211	
550	**F101**108**468**	507	211		**F101**108**480**	507	211	
600	**F101**108**471**	507	211		**F101**108**483**	507	211	
650	–				**F101**108**486**	507	211	

* Tipmatic Soft-close not possible with a steel back panel

2 Nova Pro Tipmatic Soft-close
Set: unit and activator, one on each side left/right

Description	Item No.	PU		
For screw fixing	**F102**109**293**	607		

3 Synchronisation rod for Nova Pro Tipmatic Soft-close
Single item: for cutting to length

Description	Item No.	PU		
Length: 962 mm	**F102**109**393**	207		

4 Support for synchronisation rod
Single item: for screw fixing

Description	Item No.	PU		
from KB 800 mm	**F102**108**021**	207	223	

Individual components

Description	Item No.	PU		
Nova Pro Tipmatic Soft-close unit Set: one left, one right	**F102**109**294**	213		
Nova Pro Tipmatic Soft-close activator Set: one left, one right	**F102**109**295**	223		

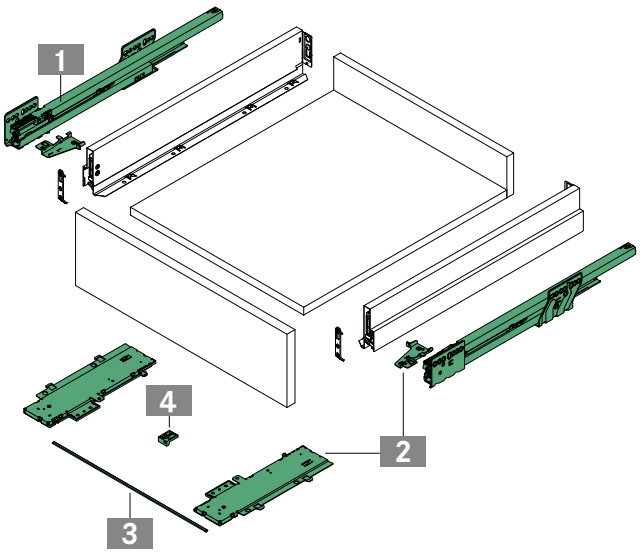

PAGE REFERENCES

Drawer sides	13	Designer panels	58	Organising systems	95
Inset panels	42	Accessories	60	Assembly technology	120
Steel back panels	56	Technical information	66	Assembly aids	124

handlie.com

PLANNING DIMENSIONS

All dimensions in millimetres

Slide installation dimensions

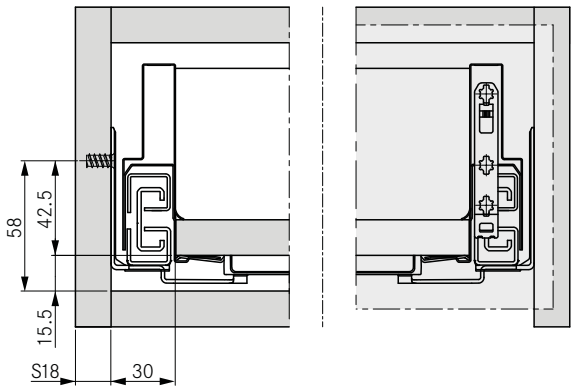

Synchronisation rod cutting dimension

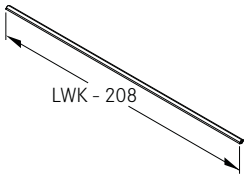

Minimum front gap

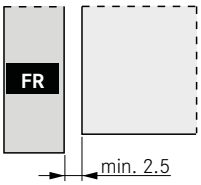

Fixing positions for full extension slide

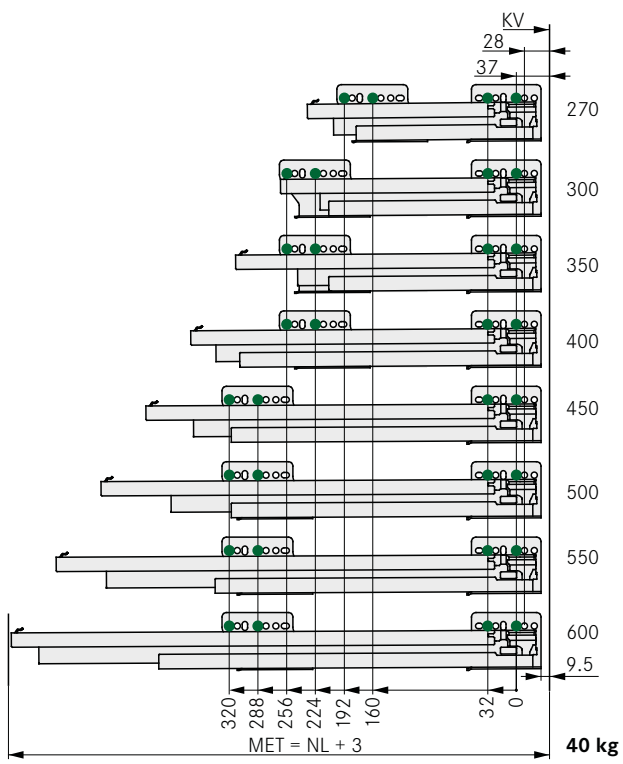

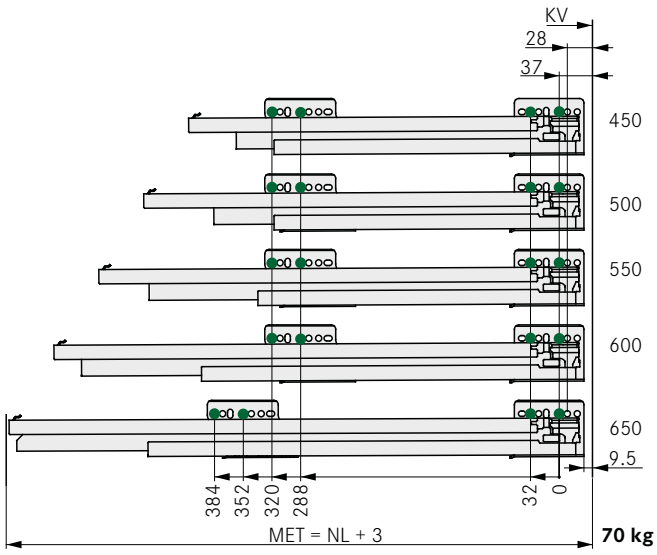

LEGEND

FR	Front
KB	Cabinet width
KV	Front edge of cabinet
LWK	Inside cabinet width

MET	Minimum installation depth
NL	Nominal length
S	Cabinet side wall

NOVA PRO TIPMATIC PLUS S16/S19

Full extension slide 40/70 kg

- Mechanical opening system
- Can be triggered anywhere on the surface of the front panel
- Drawer extends fully to allow optimal access to contents
- Fully-synchronised slide technology
- Reliable closing through catch function
- Precise adjustment of the front gap
- No modifications to the drawer necessary
- Utmost lateral stability
- Minimum drawer deflection

Packaging unit (PU):
111 = 20 items in PE
123 = 100 items in PE
207 = 10 items in a cardboard box
507 = 10 items in PE in a cardboard box

Notes:
- Used with cabinet side wall S16 and S19 mm
- Construction width 29 mm
- Refer to installation information

ORDER INFORMATION

1 Nova Pro full extension slide Tipmatic Plus S16/S19
Set: One left, one right

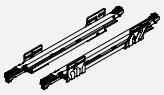

NL	40 kg				70 kg			
	Item No.	PU			Item No.	PU		
270	**F101**068**290**	507			–			
300	**F101**068**291**	507			–			
350	**F101**068**292**	507			–			
400	**F101**068**293**	507			–			
450	**F101**068**294**	507			–			
500	**F101**068**295**	507			**F101**068**301**	507		
550	**F101**068**296**	507			**F101**068**302**	507		
600	–				**F101**068**303**	507		
650	–				**F101**068**304**	507		

2 Synchronisation unit S16/S19
Set: Synchronisation rod with pre-assembled synchronisation levers (left/right)

KB	S16				S19			
	Item No.	PU			Item No.	PU		
450	**F102**068**250**	207			**F102**068**262**	207		
600	**F102**068**253**	207			**F102**068**264**	207		
900	**F102**068**255**	207			**F102**068**266**	207		
1200	**F102**068**257**	207			**F102**068**268**	207		

3 Locking unit
Set: One left, one right

Description	Item No.	PU		
For screw fixing	**F102**068**270**	507		

Individual components

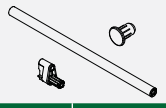

Description	Item No.	PU		
Synchronisation rod for cutting to length Length: 1079 mm	**F102**068**272**	207		
Synchronisation lever Single item: Can be used on left/right	**F102**068**273**		111	
Front buffer (optional)	**F145**068**399**			123

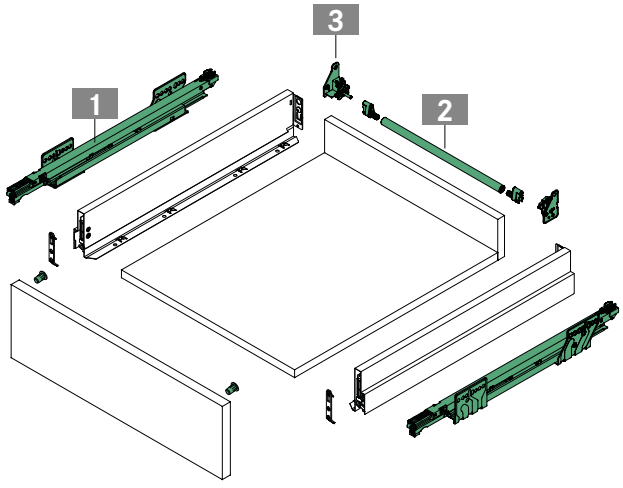

PAGE REFERENCES

Drawer sides	13	Designer panels	58	Organising systems	95
Inset panels	42	Accessories	60	Assembly technology	120
Steel back panels	56	Technical information	66	Assembly aids	124

handlie.com

PLANNING DIMENSIONS

All dimensions in millimetres

Slide installation dimensions

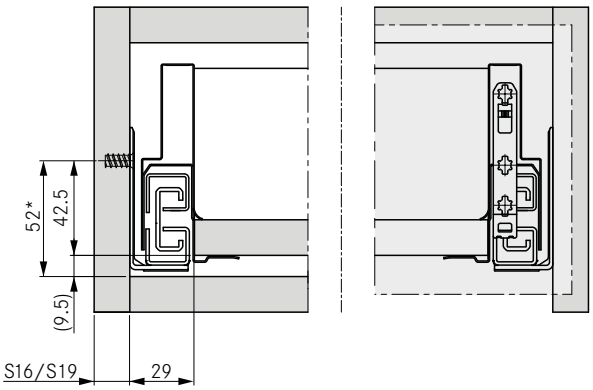

* Recommendation/Minimum dimension: 49.5 mm

Front gap adjustment

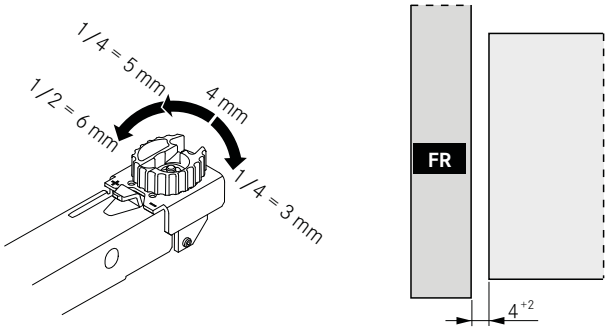

Note:
Please note that mounted front buffers increase the front gap.

Synchronisation rod cutting dimension

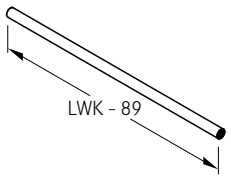

Front buffer

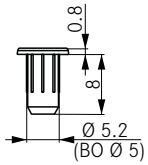

Fixing positions for full extension slide

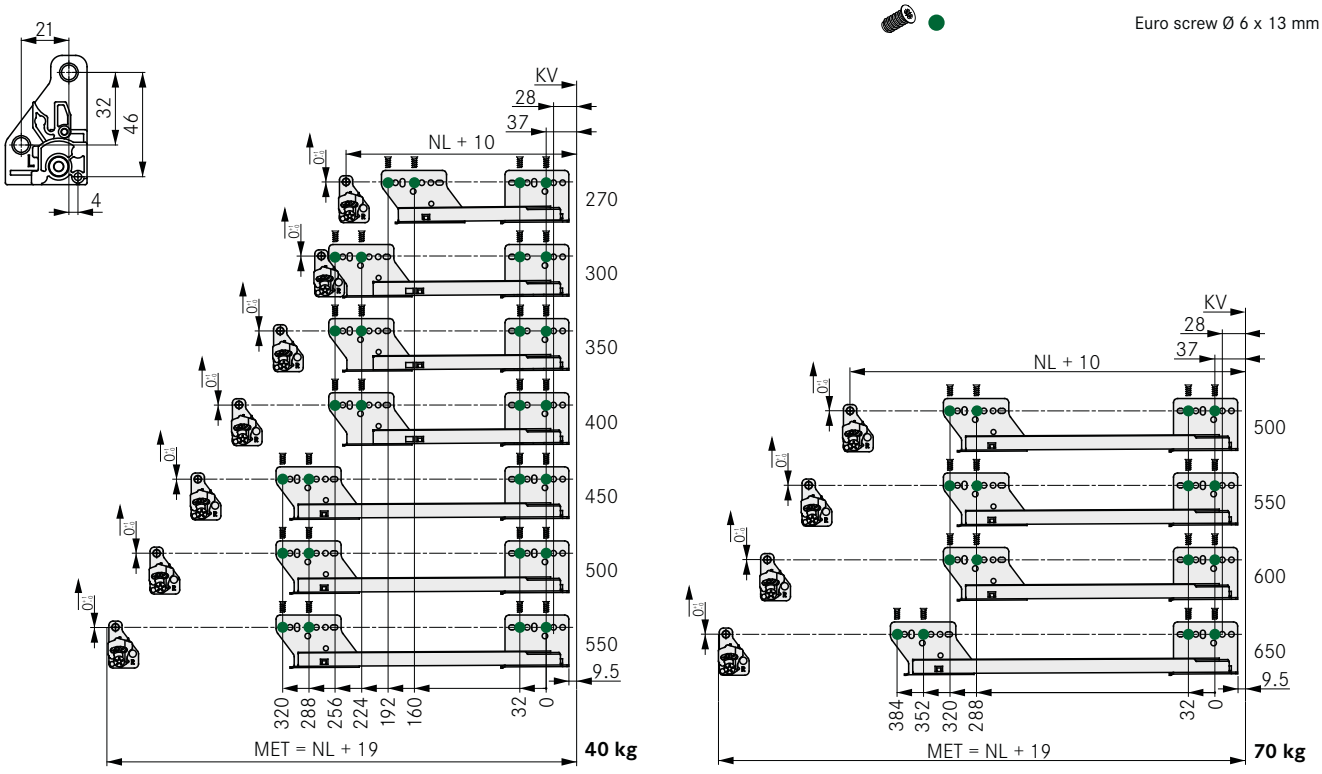

LEGEND

BO	Drilled hole		LWK	Inside cabinet width	
FR	Front		MET	Minimum installation depth	
KB	Cabinet width		NL	Nominal length	
KV	Front edge of cabinet		S	Cabinet side wall	

NOVA PRO SCALA

F8 inset panel H90 for inset drawer H90

- Colour-coordinated aluminium front panel profile
- High-quality design with smooth inside and outside surfaces
- Same dimensions as for standard drawers (inside depth)
- Also for cutting to length (see page 48)

Packaging unit (PU):
211 = 20 items in a cardboard box

Note:
Front-bottom connector recommended from width 600 mm (refer to Accessories)

ORDER INFORMATION

1 **F8 inset panel H90 for inset drawer H90, S16 and S18/S19**
Set: Inset panel with pre-assembled installation hook and cover caps

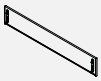

S16*	Stone		Ice		Silver	
KB	Item No.	PU	Item No.	PU	Item No.	PU
250	F102104864	211	F102104879	211	F102104894	211
300	F102104866	211	F102104881	211	F102104896	211
350	F102104867	211	F102104882	211	F102104897	211
400	F102104868	211	F102104883	211	F102104898	211
450	F102104869	211	F102104884	211	F102104899	211
500	F102104870	211	F102104885	211	F102104900	211
600	F102104872	211	F102104887	211	F102104902	211
800	F102104874	211	F102104889	211	F102104904	211
900	F102104875	211	F102104890	211	F102104905	211
1000	F102104876	211	F102104891	211	F102104906	211
1200	F102104878	211	F102104893	211	F102104908	211

S18/S19*	Stone		Ice		Silver	
KB	Item No.	PU	Item No.	PU	Item No.	PU
250	F102105101	211	F102105116	211	F102105131	211
300	F102105103	211	F102105118	211	F102105133	211
350	F102105104	211	F102105119	211	F102105134	211
400	F102105105	211	F102105120	211	F102105135	211
450	F102105106	211	F102105121	211	F102105136	211
500	F102105107	211	F102105122	211	F102105137	211
600	F102105109	211	F102105124	211	F102105139	211
800	F102105111	211	F102105126	211	F102105141	211
900	F102105112	211	F102105127	211	F102105142	211
1000	F102105113	211	F102105128	211	F102105143	211
1200	F102105115	211	F102105130	211	F102105145	211

* upon request

NOTES

- Inset panel S16 or S19 only in combination with full extension slide S16/S19 (see page 32, 36 and 40)
- Inset panel S18 only in combination with full extension slide S18 (see page 34 and 38)

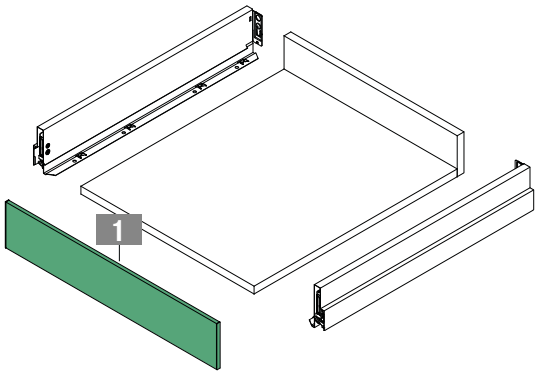

PAGE REFERENCES

Drawer sides	13	Steel back panels	56	Sensomatic	73
Slides	32	Designer panels	58	Organising systems	95
Individual components	48	Accessories	60	Assembly technology	120

handlie.com

PLANNING DIMENSIONS

All dimensions in millimetres

Installation dimensions

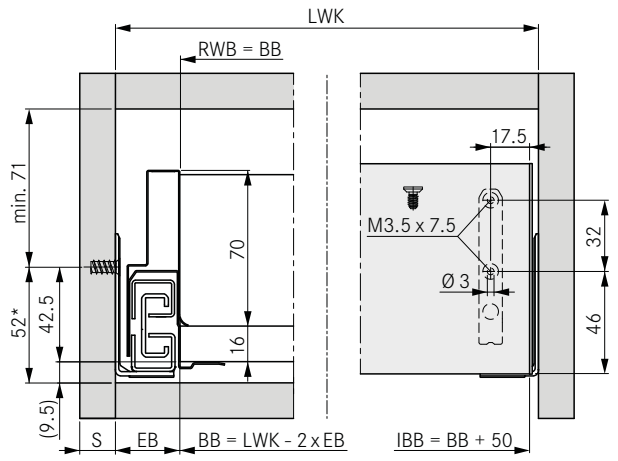

* Recommendation/Minimum dimension: 49.5 mm/Tipmatic Soft-close: 58 mm

Front panel profile H90

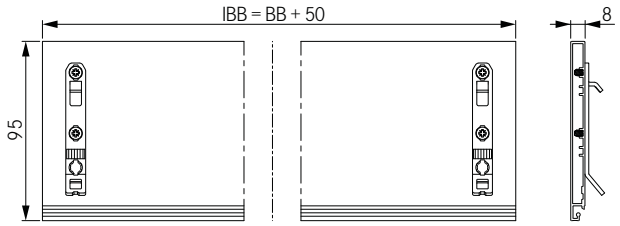

Slide

S	16/19	18
EB	29	30

Note: Slide available in two versions: For S16/S19 and S18. Refer to the Slides section (from page 32).

Fixing positions for full extension slide

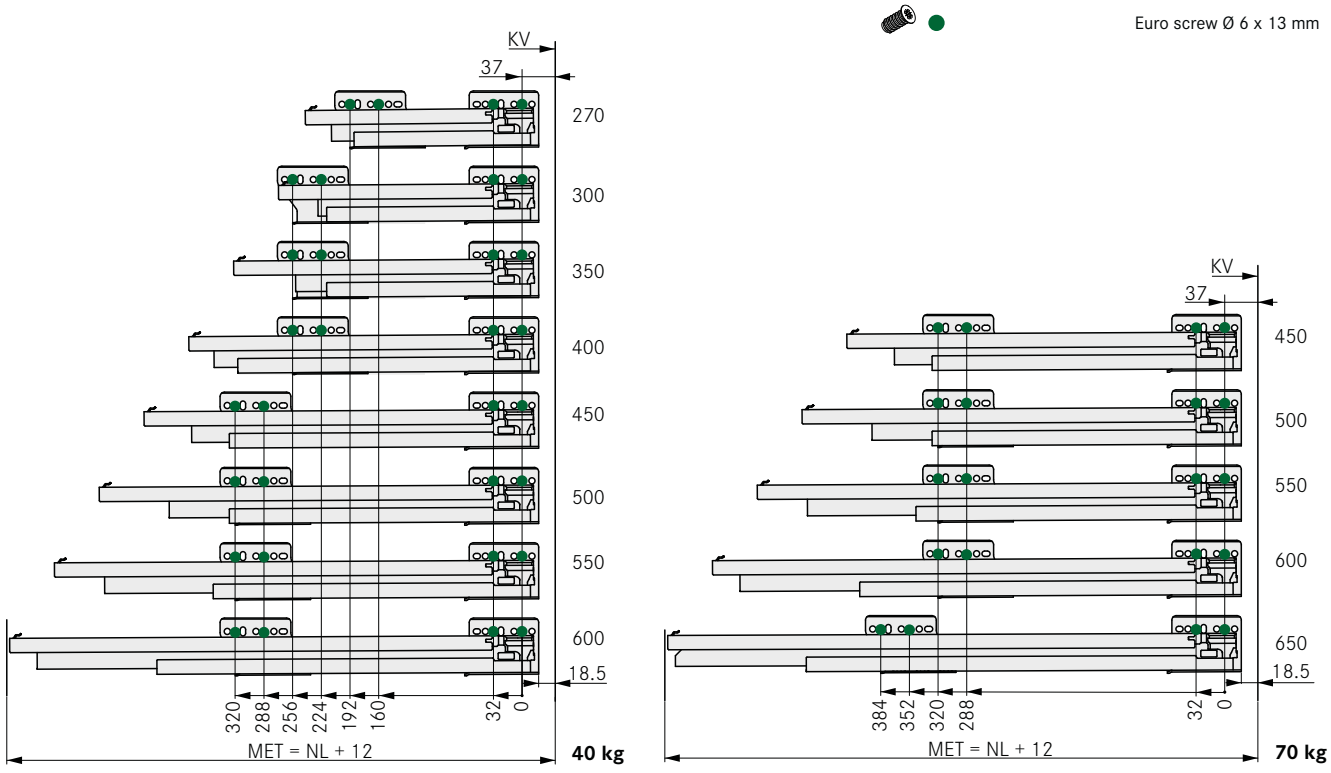

LEGEND

BB	Bottom panel width
EB	Construction width
IBB	Inset panel width
KB	Cabinet width
KV	Front edge of cabinet
LWK	Inside cabinet width
MET	Minimum installation depth
NL	Nominal length
RWB	Width of back panel
S	Cabinet side wall

NOVA PRO SCALA

F8 inset panel H186 for inset drawer H90 with rectangular railing

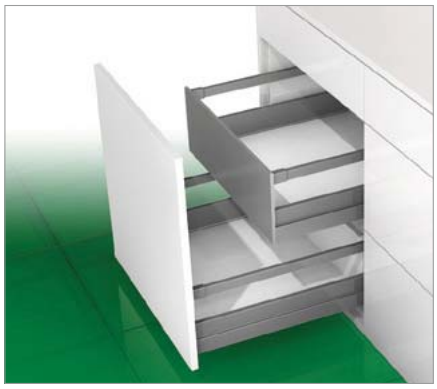

- Colour-coordinated aluminium front panel profile
- High-quality design with smooth inside and outside surfaces
- Same dimensions as for standard drawers (inside depth)
- Also for cutting to length (see page 48)

Packaging unit (PU):
207 = 10 items in a cardboard box

Note:
Front-bottom connector recommended from width 600 mm (refer to Accessories)

ORDER INFORMATION

1 **F8 inset panel H186 for inset drawer H90 with rectangular railing, S16 and S18/19**
Set: Inset panel with pre-assembled installation hook, rectangular railing holders and cover caps

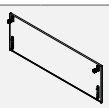

S16*	Stone		Ice		Silver	
KB	Item No.	PU	Item No.	PU	Item No.	PU
250	F102104924	207	F102104939	207	F102104954	207
300	F102104926	207	F102104941	207	F102104956	207
350	F102104927	207	F102104942	207	F102104957	207
400	F102104928	207	F102104943	207	F102104958	207
450	F102104929	207	F102104944	207	F102104959	207
500	F102104930	207	F102104945	207	F102104960	207
600	F102104932	207	F102104947	207	F102104962	207
800	F102104934	207	F102104949	207	F102104964	207
900	F102104935	207	F102104950	207	F102104965	207
1000	F102104936	207	F102104951	207	F102104966	207
1200	F102104938	207	F102104953	207	F102104968	207

S18/S19*	Stone		Ice		Silver	
KB	Item No.	PU	Item No.	PU	Item No.	PU
250	F102105161	207	F102105176	207	F102105191	207
300	F102105163	207	F102105178	207	F102105193	207
350	F102105164	207	F102105179	207	F102105194	207
400	F102105165	207	F102105180	207	F102105195	207
450	F102105166	207	F102105181	207	F102105196	207
500	F102105167	207	F102105182	207	F102105197	207
600	F102105169	207	F102105184	207	F102105199	207
800	F102105171	207	F102105186	207	F102105201	207
900	F102105172	207	F102105187	207	F102105202	207
1000	F102105173	207	F102105188	207	F102105203	207
1200	F102105175	207	F102105190	207	F102105205	207

* upon request

NOTES

- Inset panel S16 or S19 only in combination with full extension slide S16/S19 (see page 32, 36 and 40)
- Inset panel S18 only in combination with full extension slide S18 (see page 34 and 38)

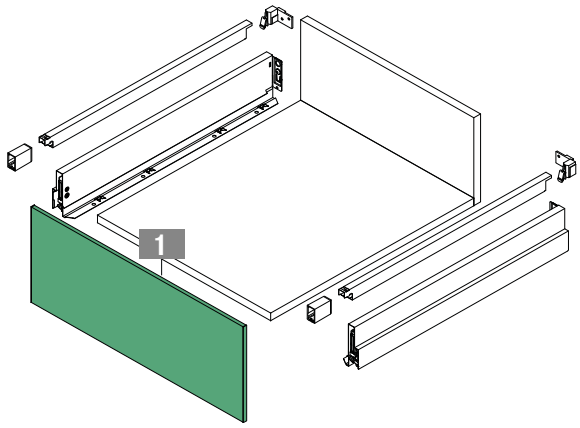

PAGE REFERENCES

Drawer sides	13	Steel back panels	56	Sensomatic	73
Slides	32	Designer panels	58	Organising systems	95
Individual components	48	Accessories	60	Assembly technology	120

handlie.com

PLANNING DIMENSIONS

All dimensions in millimetres

Installation dimensions

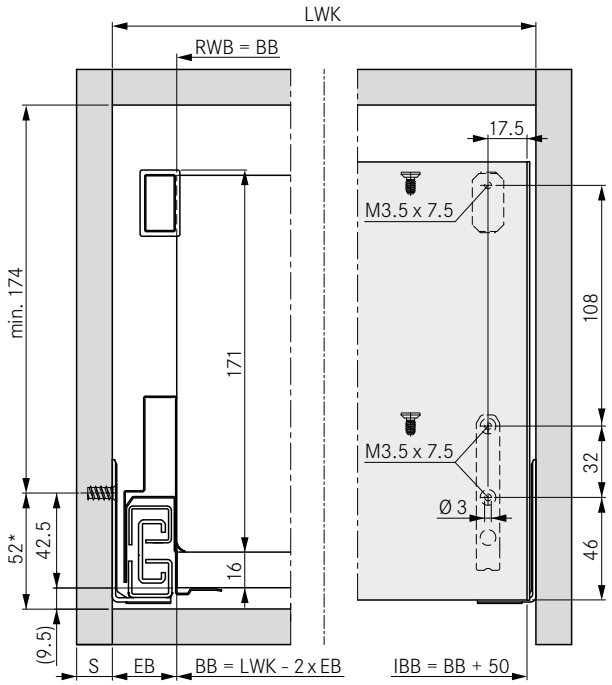

* Recommendation/Minimum dimension: 49.5 mm/Tipmatic Soft-close: 58 mm

Front panel profile H186

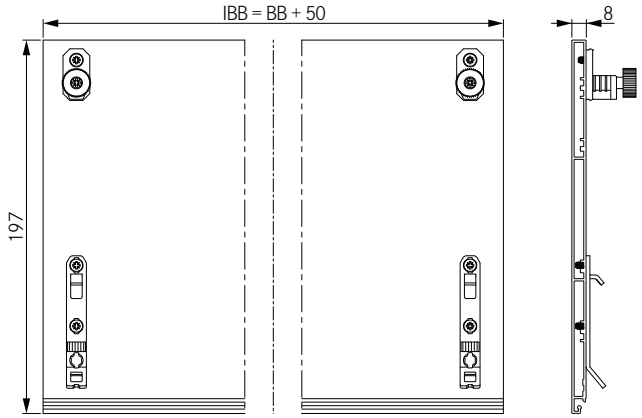

Slide

S	16/19	18
EB	29	30

Note: Slide available in two versions: For S16/S19 and S18. Refer to the Slides section (from page 32).

Fixing positions for full extension slide

Euro screw Ø 6 x 13 mm

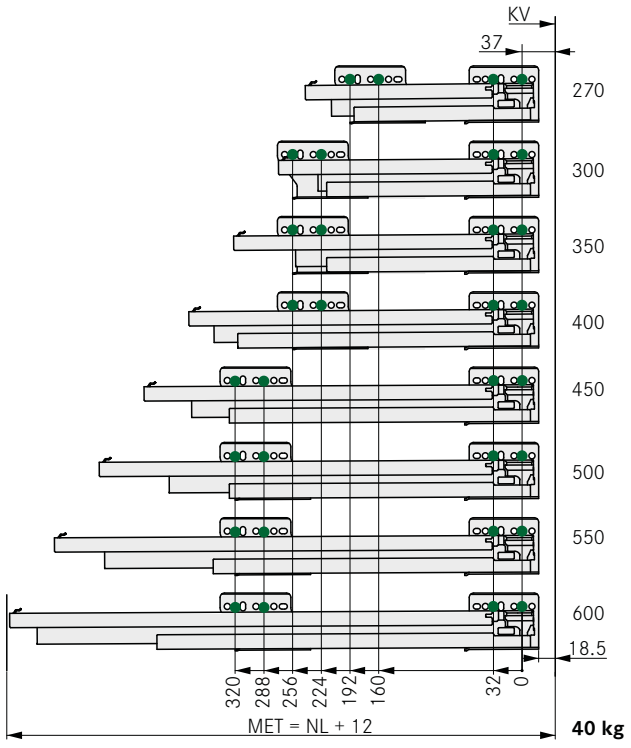

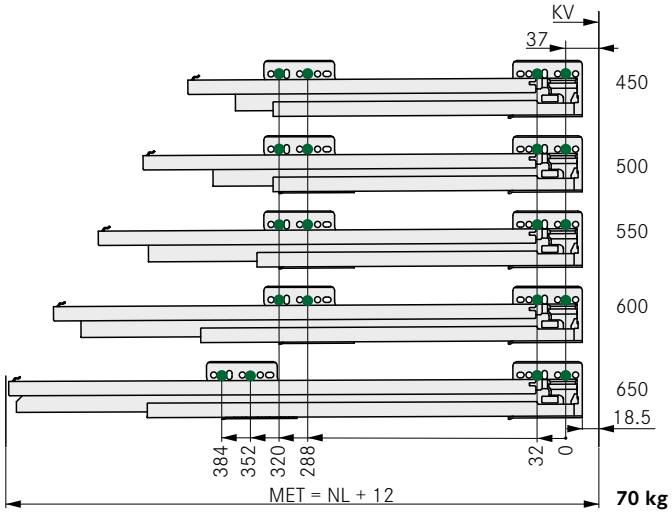

LEGEND

BB	Bottom panel width
EB	Construction width
IBB	Inset panel width
KB	Cabinet width
KV	Front edge of cabinet
LWK	Inside cabinet width
MET	Minimum installation depth
NL	Nominal length
RWB	Width of back panel
S	Cabinet side wall

NOVA PRO SCALA

F8 inset panel H186 for inset drawer H186, Crystal and Crystal Plus

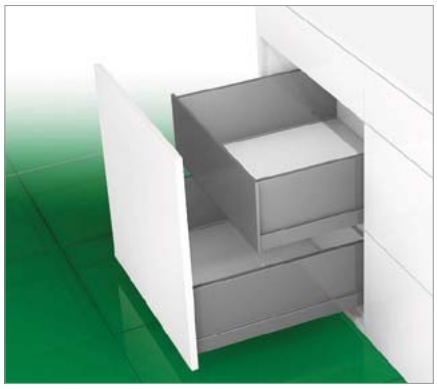

- Colour-coordinated aluminium front panel profile
- High-quality design with smooth inside and outside surfaces
- Same dimensions as for standard drawers (inside depth)
- Also for cutting to length (see page 48)

Packaging unit (PU):
207 = 10 items in a cardboard box

Note:
Front-bottom connector recommended from width 600 mm (refer to Accessories)

ORDER INFORMATION

1 **F8 inset panel H186 for inset drawer H186, Crystal and Crystal Plus, S16 and S18/S19**
Set: Inset panel with pre-assembled installation hook, front clips and cover caps

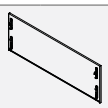

S16*	Stone		Ice		Silver	
KB	Item No.	PU	Item No.	PU	Item No.	PU
250	F102104984	207	F102104999	207	F102105014	207
300	F102104986	207	F102105001	207	F102105016	207
350	F102104987	207	F102105002	207	F102105017	207
400	F102104988	207	F102105003	207	F102105018	207
450	F102104989	207	F102105004	207	F102105019	207
500	F102104990	207	F102105005	207	F102105020	207
600	F102104992	207	F102105007	207	F102105022	207
800	F102104994	207	F102105009	207	F102105024	207
900	F102104995	207	F102105010	207	F102105025	207
1000	F102104996	207	F102105011	207	F102105026	207
1200	F102104998	207	F102105013	207	F102105028	207

S18/S19*	Stone		Ice		Silver	
KB	Item No.	PU	Item No.	PU	Item No.	PU
250	F102105221	207	F102105236	207	F102105251	207
300	F102105223	207	F102105238	207	F102105253	207
350	F102105224	207	F102105239	207	F102105254	207
400	F102105225	207	F102105240	207	F102105255	207
450	F102105226	207	F102105241	207	F102105256	207
500	F102105227	207	F102105242	207	F102105257	207
600	F102105229	207	F102105244	207	F102105259	207
800	F102105231	207	F102105246	207	F102105261	207
900	F102105232	207	F102105247	207	F102105262	207
1000	F102105233	207	F102105248	207	F102105263	207
1200	F102105235	207	F102105250	207	F102105265	207

* upon request

NOTES

- Inset panel S16 or S19 only in combination with full extension slide S16/S19 (see page 32, 36 and 40)
- Inset panel S18 only in combination with full extension slide S18 (see page 34 and 38)

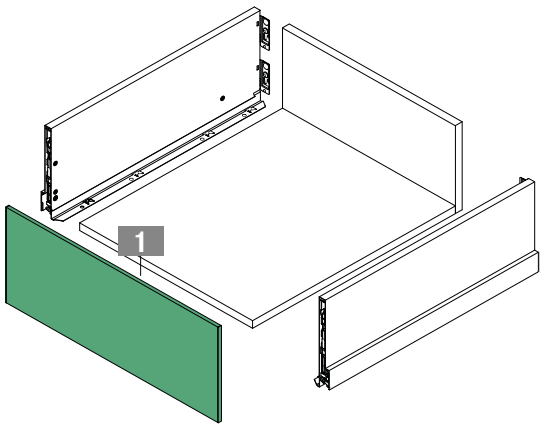

PAGE REFERENCES

Drawer sides	13	Steel back panels	56	Sensomatic	73
Slides	32	Designer panels	58	Organising systems	95
Individual components	48	Accessories	60	Assembly technology	120

handlie.com

PLANNING DIMENSIONS

All dimensions in millimetres

Installation dimensions

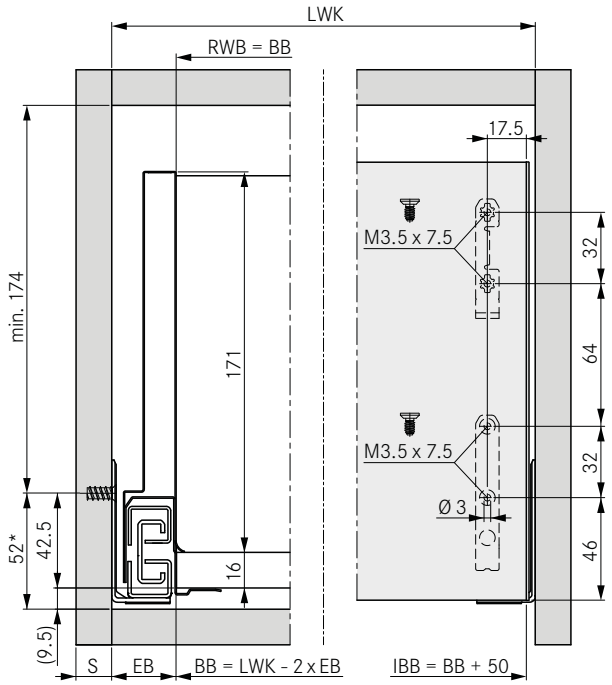

* Recommendation/Minimum dimension: 49.5 mm/Tipmatic Soft-close: 58 mm

Front panel profile H186

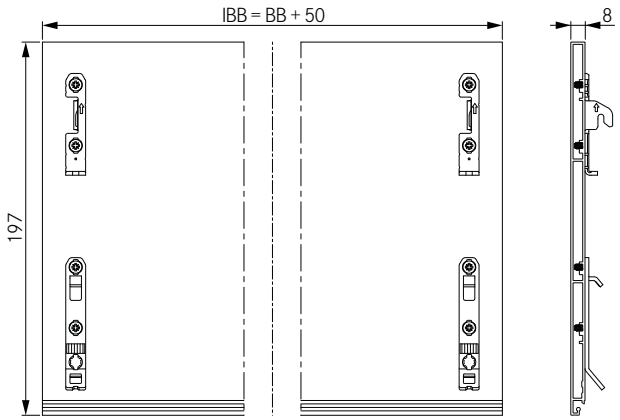

Slide

S	16/19	18
EB	29	30

Note: Slide available in two versions: For S16/S19 and S18. Refer to the Slides section (from page 32).

Can be used with

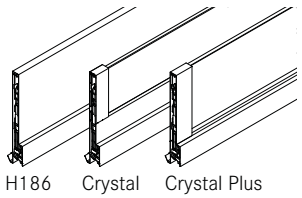

Fixing positions for full extension slide

Euro screw Ø 6 x 13 mm

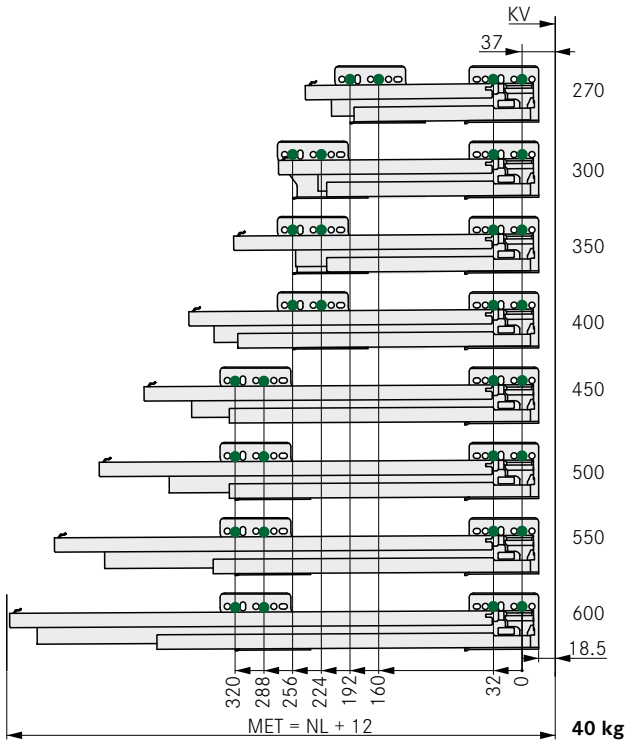

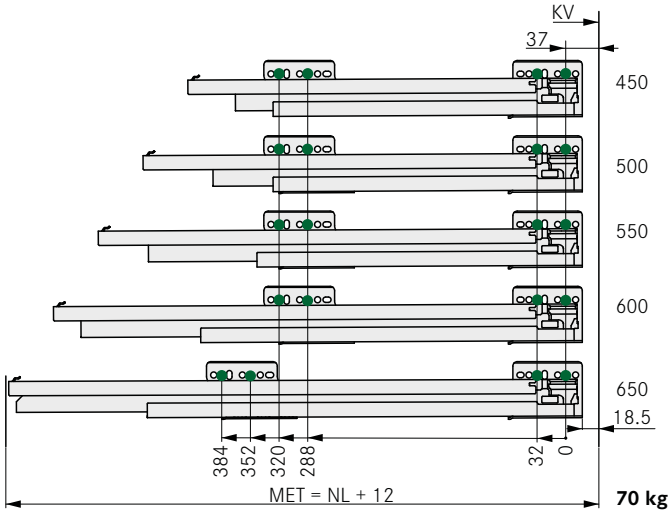

LEGEND

BB	Bottom panel width
EB	Construction width
IBB	Inset panel width
KB	Cabinet width
KV	Front edge of cabinet
LWK	Inside cabinet width
MET	Minimum installation depth
NL	Nominal length
RWB	Width of back panel
S	Cabinet side wall

NOVA PRO SCALA

F8 inset panel for cutting to length – set pack

F8 inset panel H90 for inset drawer H90	F8 inset panel H186 for inset drawer H90 with rectangular railing
The following is required: 1 x 1 1 x 3	The following is required: 1 x 2 1 x 4

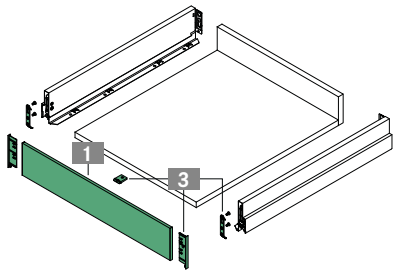

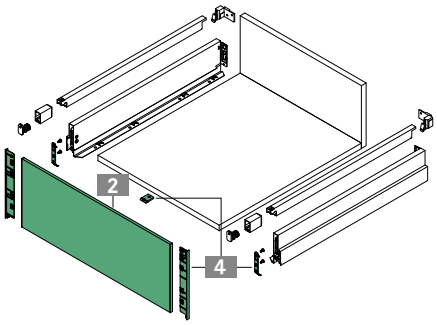

ORDER INFORMATION

1 **F8 inset panel H90 for inset drawer H90**
Single item: for cutting to length incl. cardboard drilling template

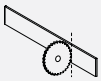

L	Stone				Ice				Silver			
	Item No.	PU			Item No.	PU			Item No.	PU		
1160	**F102**101**371**	511			**F102**105**357**	511			**F102**105**069**	511		

2 **F8 inset panel H186 for inset drawer H186, rectangular railing, Crystal and Crystal Plus**
Single item: for cutting to length incl. cardboard drilling template

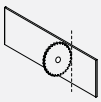

L	Stone				Ice				Silver			
	Item No.	PU			Item No.	PU			Item No.	PU		
1160	**F102**101**379**	507			**F102**105**358**	507			**F102**105**070**	507		

3 **Accessories F8 inset panel H90 for inset drawer H90**
Set: F8 cover cap (2x), installation hook (2x), special screws (4x) and front-bottom connector (2x)

H	Stone				Ice				Silver			
	Item No.	PU			Item No.	PU			Item No.	PU		
H90	**F102**109**510**	517			**F102**109**511**	517			**F102**109**512**	517		

4 **Accessories F8 inset panel H186 for inset drawer with rectangular railing**
Set: F8 cover cap (2x), installation hook (2x), special screws (6x) and front-bottom connector (2x)

H	Stone				Ice				Silver			
	Item No.	PU			Item No.	PU			Item No.	PU		
H186	**F102**109**516**	517			**F102**109**517**	517			**F102**109**518**	517		

PAGE REFERENCES

Drawer sides	13	Steel back panels	56	Sensomatic	73
Slides	32	Designer panels	58	Organising systems	95
Inset panel set	42	Accessories	60	Assembly technology	120

handlie.com

F8 inset panel H186 for inset drawer H186, Crystal and Crystal Plus

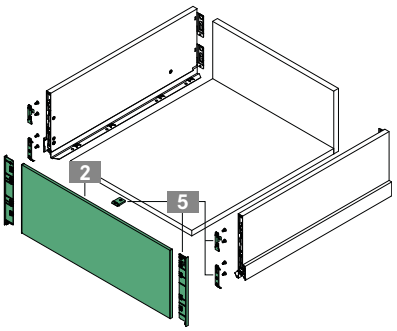

The following is required:
1 x 2
1 x 5

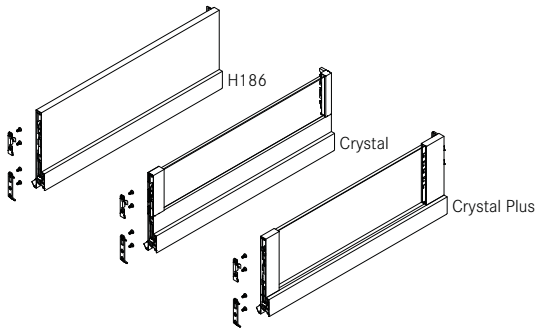

5 **Accessories F8 inset panel H186 for inset drawer H186, Crystal and Crystal Plus**
Set: F8 cover cap (2x), installation hook (2x), front clip (2x), special screws (8x) and front-bottom connector (2x)

H	Stone		Ice		Silver	
	Item No.	PU	Item No.	PU	Item No.	PU
H186	**F102**109**513**	517	**F102**109**514**	517	**F102**109**515**	517

LEGEND

H	Height
L	Length

NOVA PRO SCALA

F8 inset panel for cutting to length

F8 inset panel H90 for inset drawer H90

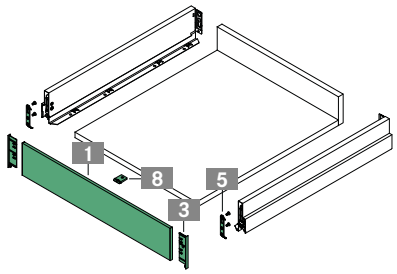

The following is required:
1 x 1
2 x 3
2 x 5

F8 inset panel H186 for inset drawer H90 with rectangular railing

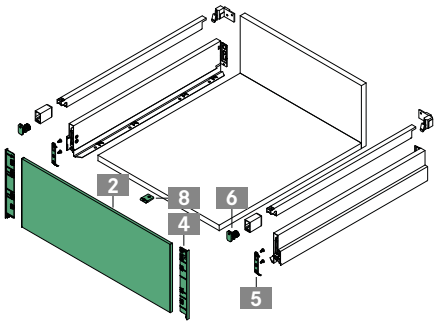

The following is required:
1 x 2
2 x 4
2 x 5
2 x 6

ORDER INFORMATION

1 F8 inset panel H90 for inset drawer H90
Single item: For cutting to length

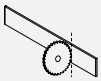

L	Stone				Ice				Silver			
	Item No.	PU			Item No.	PU			Item No.	PU		
1160	**F102**101**371**	211			**F102**105**357**	211			**F102**105**069**	211		

2 F8 inset panel H186 for inset drawer H186, rectangular railing, Crystal and Crystal Plus
Single item: For cutting to length

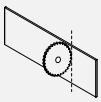

L	Stone				Ice				Silver			
	Item No.	PU			Item No.	PU			Item No.	PU		
1160	**F102**101**379**	207			**F102**105**358**	207			**F102**105**070**	207		

3 Cover cap for F8 inset panel H90
Single item: Can be used on left/right

H	Stone				Ice				Silver			
	Item No.	PU			Item No.	PU			Item No.	PU		
H90	**F102**101**384**	218			**F102**105**359**	218			**F102**109**572**	218		

4 Cover cap for F8 inset panel H186
Single item: Can be used on left/right

H	Stone				Ice				Silver			
	Item No.	PU			Item No.	PU			Item No.	PU		
H186	**F102**101**451**	214			**F102**105**360**	214			**F102**109**573**	214		

5 Installation hook
Single item: Incl. screws
Can be used on left/right

Description	Item No.	PU
For screw fixing	**F102**101**584**	223

6 Railing bracket
Single item: Incl. screws
Can be used on left/right

Description	Item No.	PU
For screw fixing	**F102**102**863**	223

PAGE REFERENCES

Drawer sides	13	Steel back panels	56	Sensomatic	73
Slides	32	Designer panels	58	Organising systems	95
Inset panel set	42	Accessories	60	Assembly technology	120

handlie.com

F8 inset panel H186 for inset drawer H186, Crystal and Crystal Plus

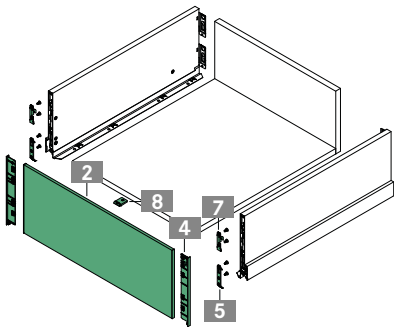

The following is required:

1 x 2
2 x 4
2 x 5
2 x 7

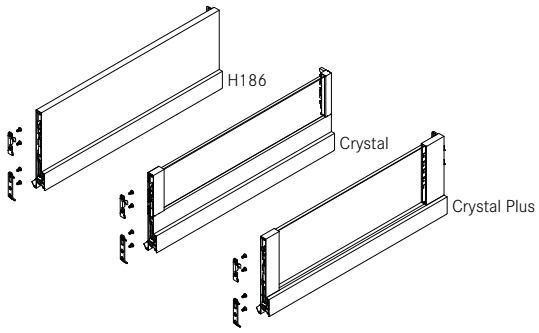

7 Front clip
Single item: Incl. screws
Can be used on left/right

Description	Item No.	PU
For screw fixing	**F102**102**864**	223

8 Front-bottom connector (optional)
Item

Description	Item No.	PU
Recommended from KB 600 mm	**F145**117**993**	223

LEGEND

H	Height
KB	Cabinet width
L	Length

NOVA PRO SCALA

Rectangular railing and divider rail

Rectangular railing for drawer with wooden back panel

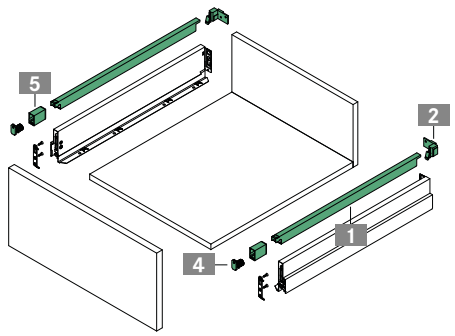

The following is required:

2 x 1
1 x 2 (l)
1 x 2 (r)
2 x 4
2 x 5

Rectangular railing for drawer with steel back panel

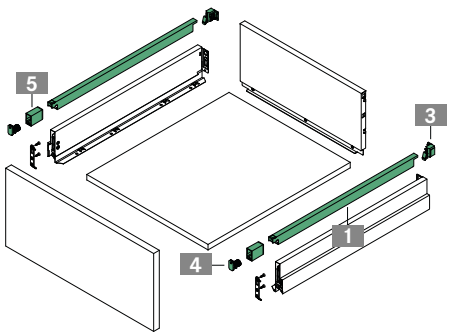

The following is required:

2 x 1
1 x 3 (l)
1 x 3 (r)
2 x 4
2 x 5

ORDER INFORMATION

1 Rectangular railing
Single item: Can be used on left/right

NL	Stone			Ice			Silver		
	Item No.	PU		Item No.	PU		Item No.	PU	
270	F102104621	223		F102104630	223		F102104639	223	
300	F102104622	223		F102104631	223		F102104640	223	
350	F102104623	223		F102104632	223		F102104641	223	
400	F102104624	223		F102104633	223		F102104642	223	
450	F102104625	223		F102104634	223		F102104643	223	
500	F102104626	223		F102104635	223		F102104644	223	
550	F102104627	217		F102104636	217		F102104645	217	
600	F102104628	217		F102104637	217		F102104646	217	
650	F102104629	217		F102104638	217		F102104647	217	

2 Railing clip for wooden back panel, screw-on
Single item: left/right

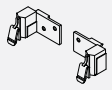

	Stone			Ice			Silver		
	Item No.	PU		Item No.	PU		Item No.	PU	
Left	F102104670	223		F102104681	223		F102104692	223	
Right	F102104671	223		F102104682	223		F102104693	223	

3 Railing clip for steel back panel, clip-in
Single item: left/right

	Stone			Ice			Silver		
	Item No.	PU		Item No.	PU		Item No.	PU	
Left	F102104674	223		F102104685	223		F102104696	223	
Right	F102104675	223		F102104686	223		F102104697	223	

4 Railing clip (front) with tilt angle adjustment, screw-on or for press fitting
Single item: Can be used on left/right

	For screw fixing			For press fitting		
	Item No.	PU		Item No.	PU	
	F102104668	133		F102104669	133	

PAGE REFERENCES

Drawer sides	13	Inset panels	42	Technical information	66
Rectangular railing set	24	Steel back panels	56	Sensomatic	73
Slides	32	Accessories	60	Organising systems	95

handlie.com

Divider railing for rectangular railing

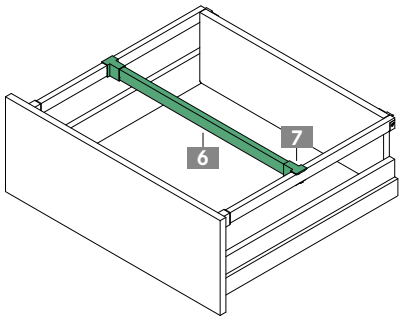

The following is required:
1 x 6
2 x 7

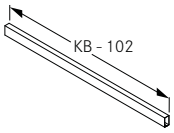

Divider railing for Crystal and Crystal Plus

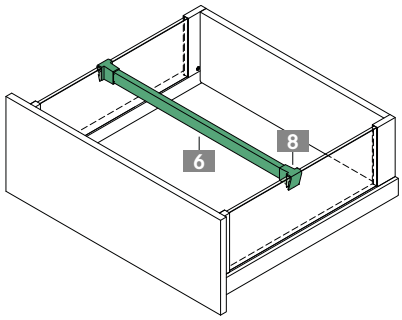

The following is required:
1 x 6
2 x 8

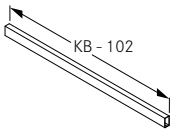

5 Railing cover cap
Single item: Can be used on left/right

	Stone		Ice		Silver	
	Item No.	PU	Item No.	PU	Item No.	PU
	F102104676	233	F102104687	233	F102104698	233

6 Divider railing
Single item: Aluminium for cutting to length (L = 1150 mm) or steel for KB 250 - 1200 (S16/S18/S19)

Steel	Stone		Ice		Silver	
KB	Item No.	PU	Item No.	PU	Item No.	PU
250*	F102103796	223	F102103817	223	F102103838	223
300	F102103798	223	F102103819	223	F102103840	223
350*	F102103799	223	F102103820	223	F102103841	223
400	F102103800	223	F102103821	223	F102103842	223
450	F102103801	223	F102103822	223	F102103843	223
500	F102103802	223	F102103823	223	F102103844	223
600	F102103804	217	F102103825	217	F102103846	217
800	F102103808	217	F102103829	217	F102103850	217
900	F102103810	217	F102103831	217	F102103852	217
1000	F102103812	217	F102103833	217	F102103854	217
1200	F102103816	217	F102103837	217	F102103858	217

Alu	Stone		Ice		Silver	
L	Item No.	PU	Item No.	PU	Item No.	PU
1150	F102108653	207	F102108654	207	F102108655	207

* upon request

7 Divider railing clip for rectangular railing
Single item: Can be used on left/right

	Stone		Ice		Silver	
	Item No.	PU	Item No.	PU	Item No.	PU
	F102104677	233	F102104688	233	F102104699	233

8 Divider railing clip for Crystal and Crystal Plus
Single item: Can be used on left/right

	Stone		Ice		Silver	
	Item No.	PU	Item No.	PU	Item No.	PU
	F102104678	233	F102104689	233	F102104700	233

LEGEND

KB	Cabinet width
L	Length
NL	Nominal length
S	Cabinet side wall

NOVA PRO SCALA CRYSTAL

Clip for slide-in elements

Clip for Crystal drawer with wooden back panel

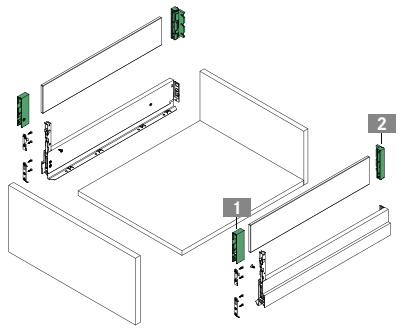

The following is required:
1 x 1 (l)
1 x 1 (r)
1 x 2 (l)
1 x 2 (r)

Clip for Crystal drawer with steel back panel

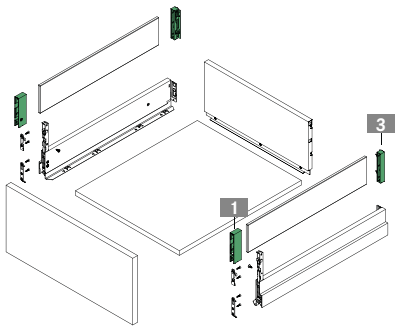

The following is required:
1 x 1 (l)
1 x 1 (r)
1 x 3 (l)
1 x 3 (r)

ORDER INFORMATION

1 Glass clip (front), clip-in
Single item: left/right

	Stone			Ice			Silver		
	Item No.	PU		Item No.	PU		Item No.	PU	
Left	**F102**104**837**	223		**F102**104**844**	223		**F102**104**851**	223	
Right	**F102**104**838**	223		**F102**104**845**	223		**F102**104**852**	223	

2 Glass clip for wooden back panel, screw-on
Single item: left/right

	Stone			Ice			Silver		
	Item No.	PU		Item No.	PU		Item No.	PU	
Left	**F102**104**839**	223		**F102104846**	223		**F102**104**853**	223	
Right	**F102**104**840**	223		**F102104847**	223		**F102**104**854**	223	

3 Glass clip for steel back panel, clip-in
Single item: left/right

	Stone			Ice			Silver		
	Item No.	PU		Item No.	PU		Item No.	PU	
Left	**F102**104**841**	223		**F102**104**848**	223		**F102**104**855**	223	
Right	**F102**104**842**	223		**F102**104**849**	223		**F102**104**856**	223	

PAGE REFERENCES

Crystal drawer sides	28	Steel back panels	56	Sensomatic	73
Slides	32	Accessories	60	Organising systems	95
Inset panels	42	Technical information	66	Assembly technology	120

handlie.com

LEGEND

NOVA PRO SCALA
Steel back panels

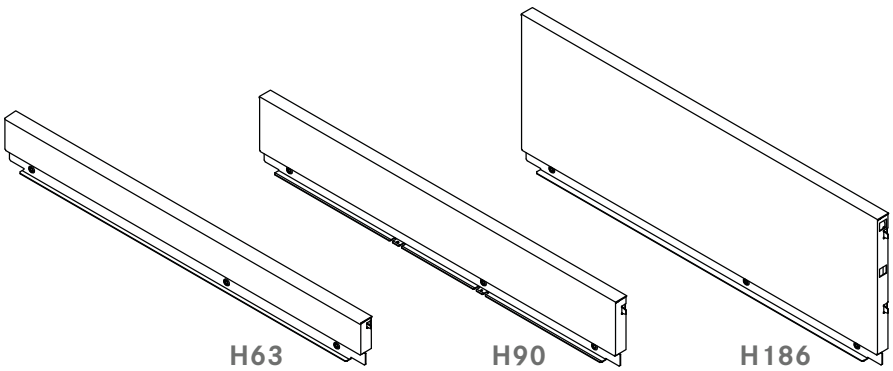

Packaging unit (PU):
213 = 25 items in a cardboard box
217 = 50 items in a cardboard box

Notes:
- Steel back panel S16 or S19 only in combination with full extension slide S16/S19 (see page 32, 36 and 40)
- Steel back panel S18 only in combination with full extension slide S18 (see page 34 and 38)

ORDER INFORMATION

1 Steel back panel S16

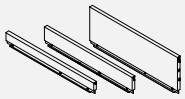

H63*	Stone			Ice			Silver		
KB	Item No.	PU		Item No.	PU		Item No.	PU	
600	F102103909	217		F102103924	217		F102103939	217	
800	F102103911	217		F102103926	217		F102103941	217	
900	F102103912	217		F102103927	217		F102103942	217	
1000	F102103913	217		F102103928	217		F102103943	217	
1200	F102103915	217		F102103930	217		F102103945	217	

H90*	Stone			Ice			Silver		
KB	Item No.	PU		Item No.	PU		Item No.	PU	
250	F102103961	217		F102103976	217		F102103991	217	
300	F102103963	217		F102103978	217		F102103993	217	
350	F102103964	217		F102103979	217		F102103994	217	
400	F102103965	217		F102103980	217		F102103995	217	
450	F102103966	217		F102103981	217		F102103996	217	
500	F102103967	217		F102103982	217		F102103997	217	
600	F102103969	217		F102103984	217		F102103999	217	
800	F102103971	217		F102103986	217		F102104001	217	
900	F102103972	217		F102103987	217		F102104002	217	
1000	F102103973	217		F102103988	217		F102104003	217	
1200	F102103975	217		F102103990	217		F102104005	217	

H186*	Stone			Ice			Silver		
KB	Item No.	PU		Item No.	PU		Item No.	PU	
250	F102104081		213	F102104096		213	F102104111		213
300	F102104083		213	F102104098		213	F102104113		213
350	F102104084		213	F102104099		213	F102104114		213
400	F102104085		213	F102104100		213	F102104115		213
450	F102104086		213	F102104101		213	F102104116		213
500	F102104087		213	F102104102		213	F102104117		213
600	F102104089		213	F102104104		213	F102104119		213
800	F102104091		213	F102104106		213	F102104121		213
900	F102104092		213	F102104107		213	F102104122		213
1000	F102104093		213	F102104108		213	F102104123		213
1200	F102104095		213	F102104110		213	F102104125		213

* upon request

PAGE REFERENCES

Drawer sides	13	Designer panels	58	Sensomatic	73
Slides	32	Accessories	60	Organising systems	95
Inset panels	42	Technical information	66	Assembly technology	120

handlie.com

PLANNING DIMENSIONS

All dimensions in millimetres

Slide installation dimensions

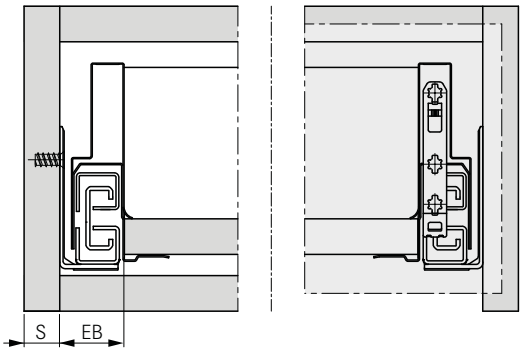

Cutting the bottom panel to size

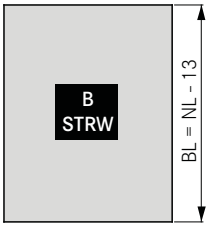

Note:
Please note that with steel back panels the bottom panel must be cut to a size which is 6 mm longer than when using wooden back panels. Please refer to the diagram opposite.

Slide		
S	16/19	18
EB	29	30

Note: Slide available in two versions: For S16/S19 and S18. Refer to the Slides section (from page 32).

2 Steel back panel S18/S19

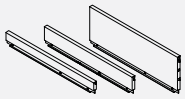

H63*	Stone			Ice			Silver		
KB	Item No.	PU		Item No.	PU		Item No.	PU	
600	F102104389	217		F102104404	217		F102104419	217	
800	F102104391	217		F102104406	217		F102104421	217	
900	F102104392	217		F102104407	217		F102104422	217	
1000	F102104393	217		F102104408	217		F102104423	217	
1200	F102104395	217		F102104410	217		F102104425	217	

H90*	Stone			Ice			Silver		
KB	Item No.	PU		Item No.	PU		Item No.	PU	
250	F102104441	217		F102104456	217		F102104471	217	
300	F102104443	217		F102104458	217		F102104473	217	
350	F102104444	217		F102104459	217		F102104474	217	
400	F102104445	217		F102104460	217		F102104475	217	
450	F102104446	217		F102104461	217		F102104476	217	
500	F102104447	217		F102104462	217		F102104477	217	
600	F102104449	217		F102104464	217		F102104479	217	
800	F102104451	217		F102104466	217		F102104481	217	
900	F102104452	217		F102104467	217		F102104482	217	
1000	F102104453	217		F102104468	217		F102104483	217	
1200	F102104455	217		F102104470	217		F102104485	217	

H186*	Stone			Ice			Silver		
KB	Item No.	PU		Item No.	PU		Item No.	PU	
250	F102104561		213	F102104576		213	F102104591		213
300	F102104563		213	F102104578		213	F102104593		213
350	F102104564		213	F102104579		213	F102104594		213
400	F102104565		213	F102104580		213	F102104595		213
450	F102104566		213	F102104581		213	F102104596		213
500	F102104567		213	F102104582		213	F102104597		213
600	F102104569		213	F102104584		213	F102104599		213
800	F102104571		213	F102104586		213	F102104601		213
900	F102104572		213	F102104587		213	F102104602		213
1000	F102104573		213	F102104588		213	F102104603		213
1200	F102104575		213	F102104590		213	F102104605		213

* upon request

LEGEND

B	Bottom panel
BL	Bottom panel length
EB	Construction width
KB	Cabinet width
NL	Nominal length
S	Cabinet side wall
STRW	Steel back panel

NOVA PRO SCALA
Designer panels

- Designer panels offer new design possibilities for differentation
- High-quality visual design with material combinations enable segmentation on the basis of one system
- The designer panels are simply fitted with either magnetic tape or adhesive bonding
- Can be attached after the production process

Packaging unit (PU):
501 = 1 items in PE in a cardboard box

Note:
Designer panels are not available from GRASS

ORDER INFORMATION

Magnetic tape, adhesive

Description	Item No.	PU
Roll 20 x 1.5 mm, 40 m	**F102**108**509**	501

NOTE

For designer panel H63 the magnetic tape must be halved to 10 x 1.5 mm.

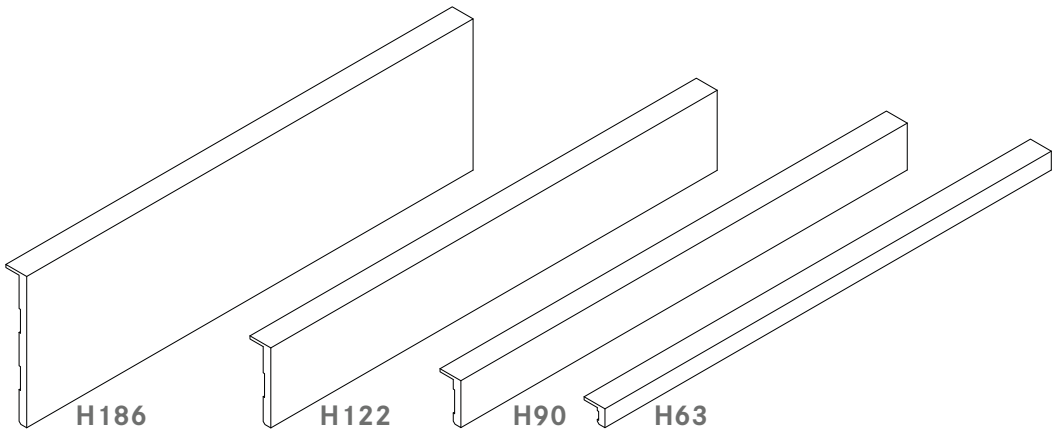

PAGE REFERENCES

Drawer sides	13	Steel back panels	56	Sensomatic	73
Slides	32	Accessories	60	Organising systems	95
Inset panels	42	Technical information	66	Assembly technology	120

handlie.com

PLANNING DIMENSIONS

All dimensions in millimetres

Installation dimensions designer panels for H63

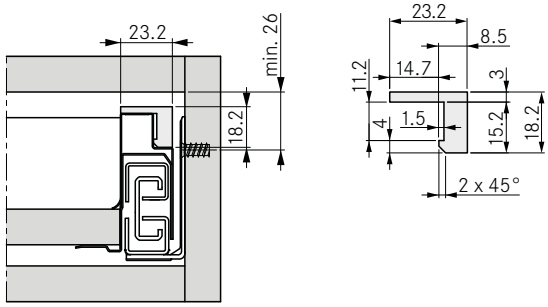

Installation dimensions designer panels for H90

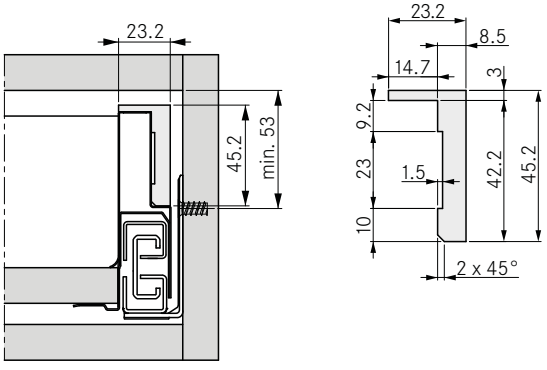

Installation dimensions designer panels for H122

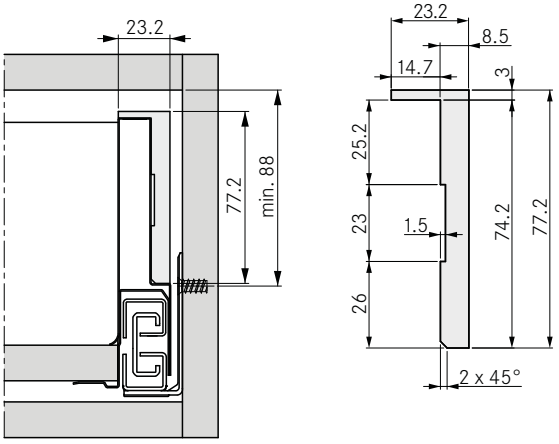

Installation dimensions designer panels for H186

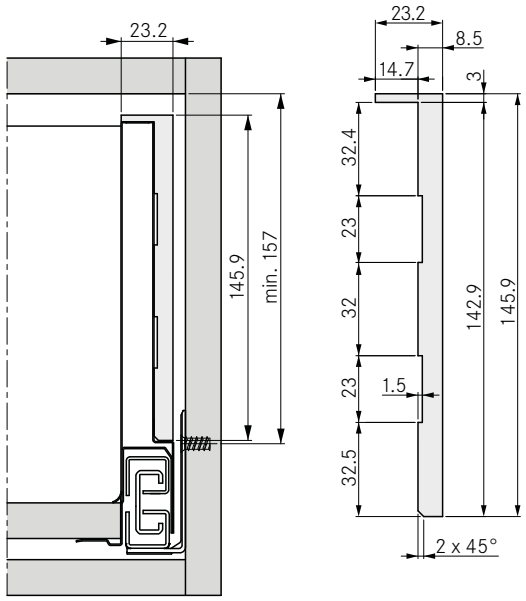

Designer panel cutting dimensions

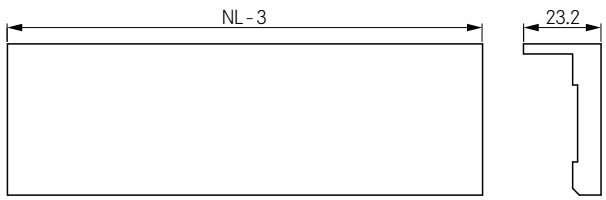

Design options

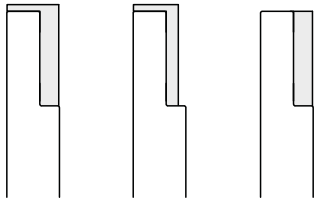

Magnetic tape

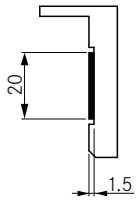

LEGEND

NL	**Nominal length**

NOVA PRO SCALA
Accessories

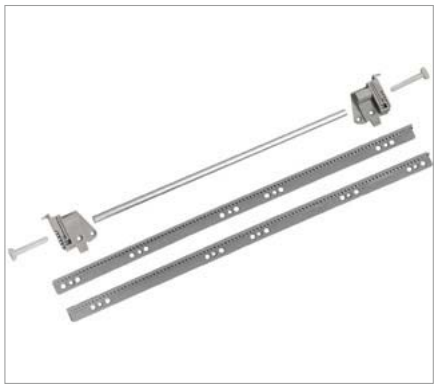

- Maximum stability for extra-wide regular and pot drawers
- Maximum opening comfort and perfect running properties
- For drawer widths of up to 1500 mm

Packaging unit (PU):
123 = 100 items in PE
213 = 25 items in a cardboard box
507 = 10 items in PE in a cardboard box

Note:
Cannot be used with designer panels for Nova Pro Scala

SIDE STABILISING DEVICE

1 **Torsion bar**
Set: Torsion bar, pinion, support (left/right)

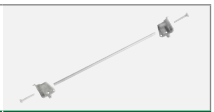

KB	Item No.	PU			
900	**F102**066**385**	507	213		
1000	**F102**066**386**	507	213		
1100	**F102**066**387**	507	213		
1200	**F102**066**388**	507	213		
1500	**F102**066**389**	507	213		

Note: For special cabinet outside width: Torsion bar KB - 100 mm

2 **Gliding channel**
Set: One left, one right

NL	Aluminium metallic	PU			
450	**F102**050**864**	507	213		
500	**F102**050**865**	507	213		
550	**F102**050**866**	507			
600	**F102**050**867**	507	213		
650	**F102**050**868**	507			

SHEET METAL SCREW

	Designation	Item No.	PU
	4.8 x 13 mm (when using a steel back panel)	**F145**050**869**	123

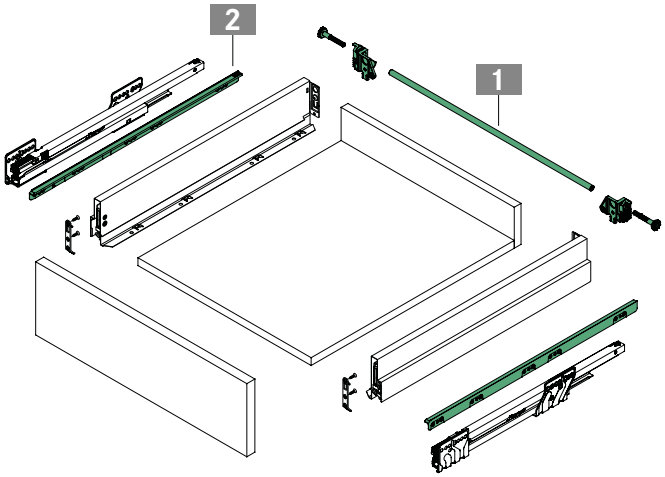

PAGE REFERENCES

Drawer sides	13	Steel back panels	56	Sensomatic	73
Slides	32	Designer panels	58	Organising systems	95
Inset panels	42	Technical information	66	Assembly technology	120

handlie.com

INSTALLATION INFORMATION

Gliding channel assembly

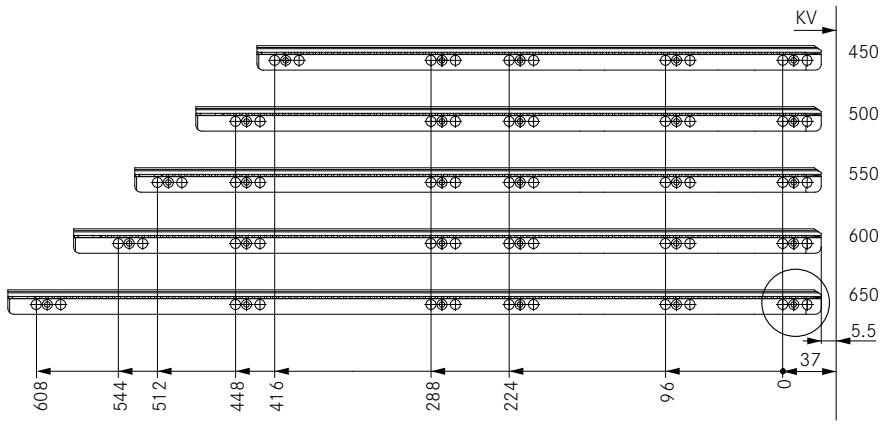

NL	LTK
450	469
500	519
550	569
600	619
650	669

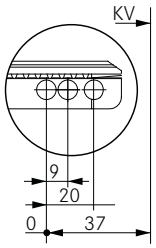

Side view

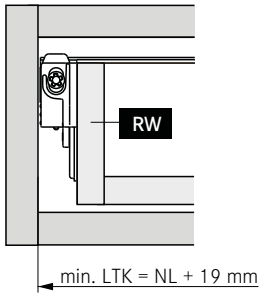

Front view

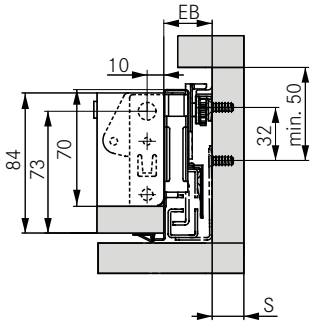

Rear view

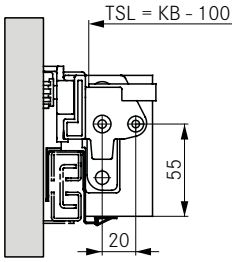

Assembly of the side stabilising device

1

2

3

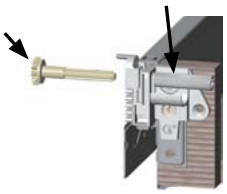

4

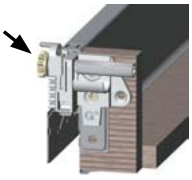

1 Positioning the left and right-hand support
2 Screwing on the support
Depending on the back panel, use the following:
Wooden back panel: Chipboard screws Ø 4 x 20 mm
Steel back panel: Sheet metal screws Ø 4.8 x 13 mm
3 Insertion of the torsion bar and pushing in the pinion
4 Pushing the pinion into the locking position. Finished!

NOTES

Additional fixture Ø 4 x 15 mm possible
with wooden back panel

- Drawer widths 900 to 1500 mm
- Slide lengths 450 to 600 mm
- Cabinet sides 15 to 19 mm
- Torsion rod length = cabinet outside width - 100 mm

LEGEND

EB	Construction width
KB	Cabinet width
KV	Front edge of cabinet
LTK	Inside cabinet depth
NL	Nominal length
RW	Back panel
S	Cabinet side wall
TSL	Torsion rod length

NOVA PRO SCALA
Accessories

BLIND PANEL SNAP-ON BRACKET

			Item No.	PU
• Tool-free installation and removal • Snap-on quick mounting and removal of the front • Worktop Fitted: 5.5 mm min. Later: 0 mm • Side adjustment +/-1.5 mm • Height adjustment +/- 2 mm • Depth adjustment +/- 1,5 mm **Note:** Supplied without installation hook		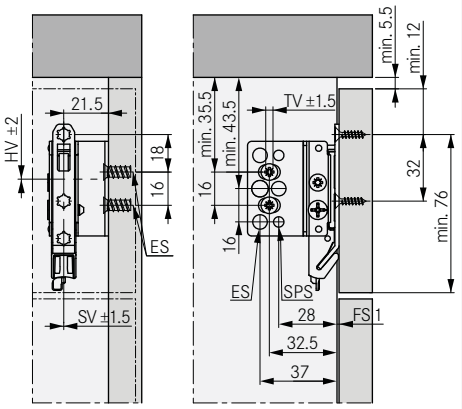	**F102**108**430**	217

FRONT BUFFER

		Item No.	PU
• Gentle closing of the door against the cabinet	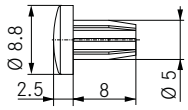	**F071**044**351**	147

NOVA PRO SPACER

			Item No.	PU	
• Thickness 25 mm • The hole pattern is suitable for Nova Pro and Nova Pro Scala • The spacer can be used on the left and the right		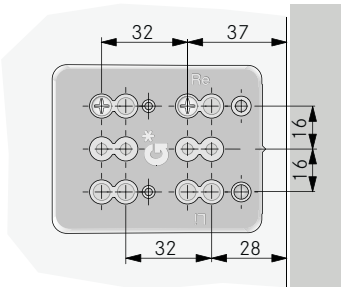	**F102**062**616**	211	223

PAGE REFERENCES

Drawer sides	13	Steel back panels	56	Sensomatic	73
Slides	32	Designer panels	58	Organising systems	95
Inset panels	42	Technical information	66	Assembly technology	120

handlie.com

FRONT-BOTTOM CONNECTOR

			Item No.	PU	
• For wide drawers with a cabinet width of over 800 mm		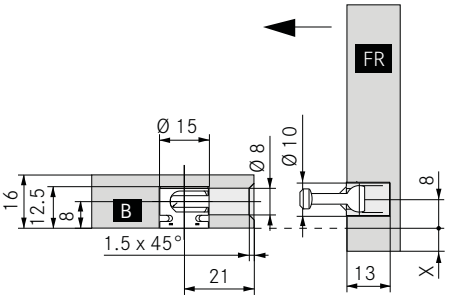	**F148**026**744**	107	223

FRONT-BOTTOM CONNECTOR F8 INSET PANEL

			Item No.	PU
• For wide drawers with a cabinet width of over 600 mm		KB = 600 - 800 mm 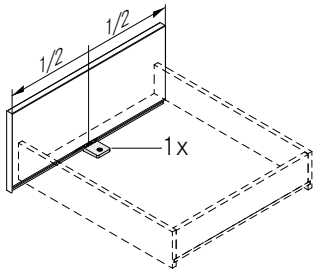 KB = 800 - 1200 mm 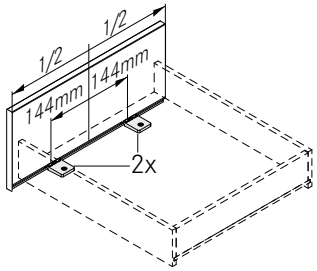	**F145**117**993**	223

LEGEND

B	Bottom panel	HV	Height adjustment	TV	Depth adjustment
ES	Euro countersunk screw	KB	Cabinet width		
FR	Front	SPS	Chipboard screw		
FS	Front gap	SV	Side adjustment		

NOVA PRO SCALA
Accessories

DOWEL

		Item No.	PU	
• Ø 8 x 12 mm	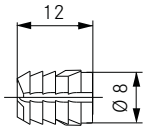	**F071**004**885**	123	247
• Ø 10 x 12 mm	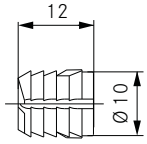	**F071**005**853**	123	261

EURO SCREWS

		Item No.	PU	
• Steel, nickel-plated, for screwing into pre-drilled hole system Ø 5 mm (cross head screwdriver Pozidriv Nr. 2)	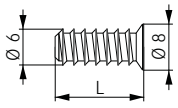	L = 8.5	**F145**089**301**	123	
		L = 11.5	**F145**083**544**	123	147
		L = 13	**F145**083**545**	123	147
		L = 14.5	**F145**083**546**	123	147
		L = 17	**F145**087**107**	123	
		L = 22	**F145**087**108**	123	

SPECIAL EURO SCREWS

			Item No.	PU
• Steel, nickel-plated, for screwing into pre-drilled hole system Ø 5 mm (cross head screwdriver Pozidriv Nr. 2)	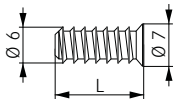	L = 8.5	**F145**089**355**	123
		L = 13.5	**F145**088**185**	123

CHIPBOARD SCREWS

			Item No.	PU
• Head Ø 7 mm	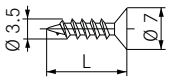	L = 11	**F145**010**742**	261
		L = 15	**F145**087**110**	123
		L = 17	**F145**087**111**	147

SPECIAL SCREW

		Item No.	PU
• Self-tapping countersunk screw, M 3.5 x 7.5 mm	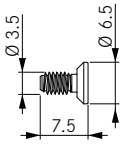	**F145**117**998**	239

PAGE REFERENCES

Drawer sides	13	Steel back panels	56	Sensomatic	73
Slides	32	Designer panels	58	Organising systems	95
Inset panels	42	Technical information	66	Assembly technology	120

handlie.com

LEGEND

L	Length

ADJUSTMENT

Height adjustment H63

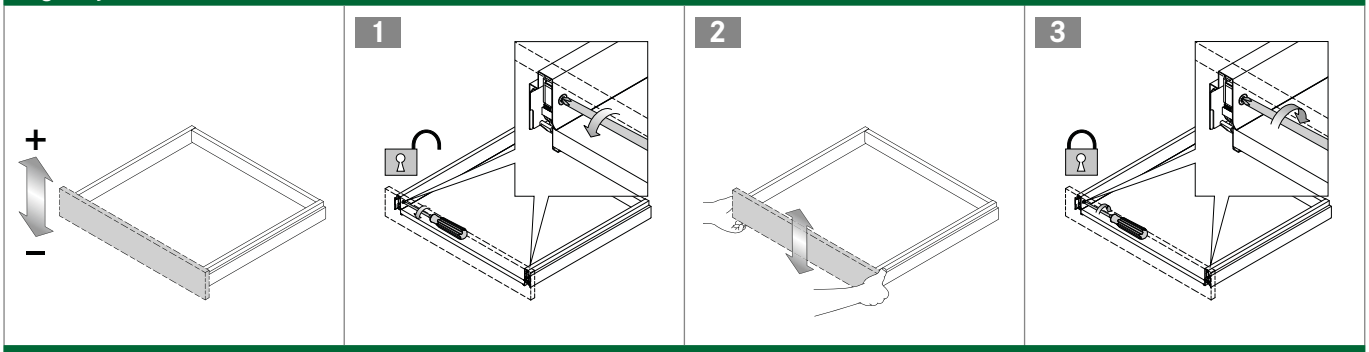

Height adjustment H90 and H122

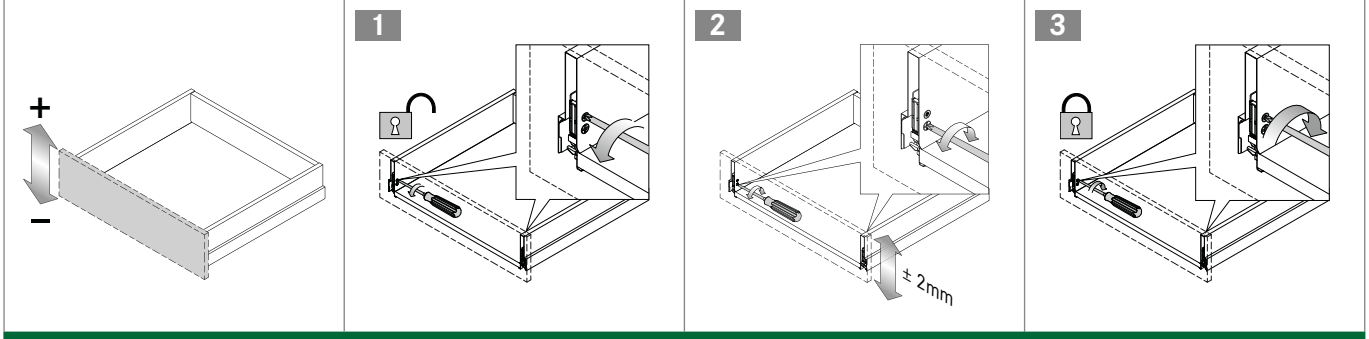

Height adjustment H186, Crystal and Crystal Plus

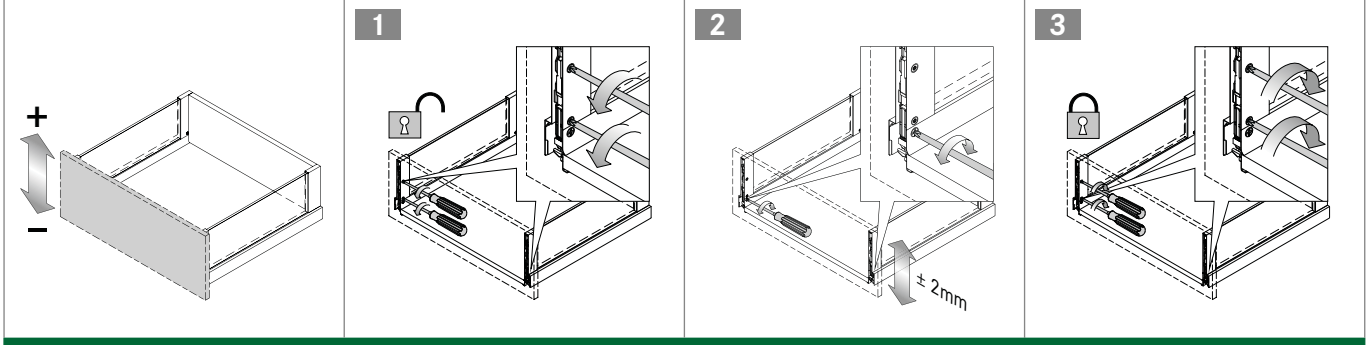

Side adjustment

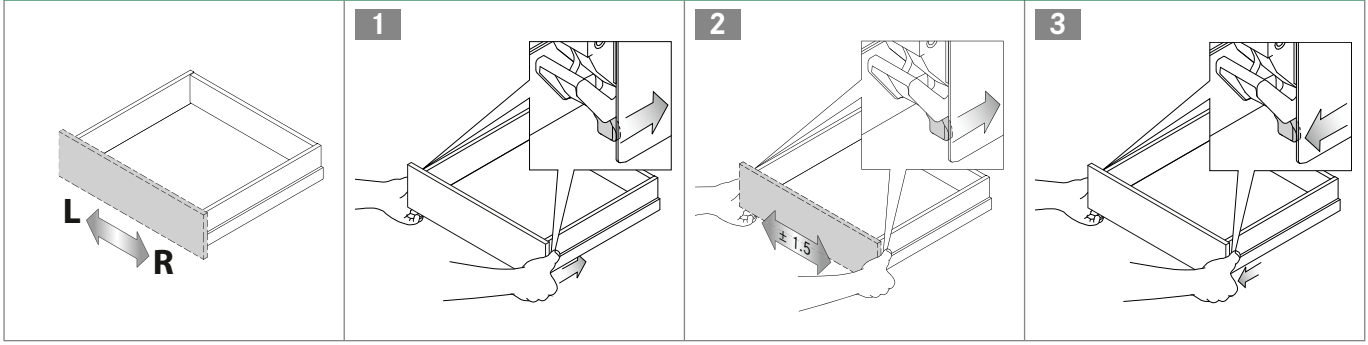

PAGE REFERENCES

Drawer sides	13	Steel back panels	56	Sensomatic	73
Slides	32	Designer panels	58	Organising systems	95
Inset panels	42	Accessories	60	Assembly technology	120

ADJUSTMENT

Tilt angle adjustment H90 with rectangular railing

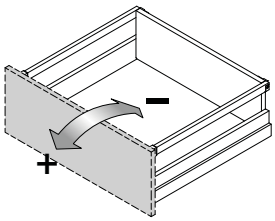

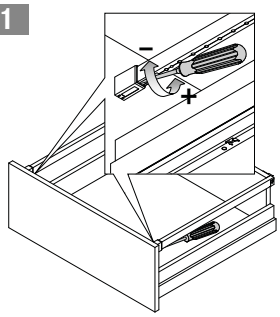

Tilt angle adjustment H90 with rectangular railing and front support

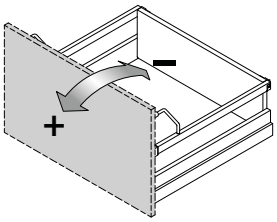

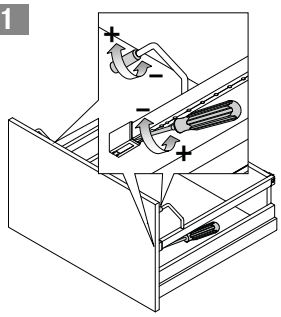

Tilt angle adjustment H122, H186, Crystal and Crystal Plus

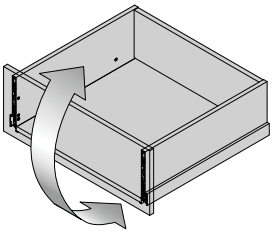

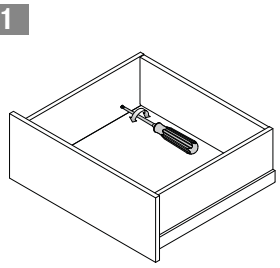

ASSEMBLY/REMOVAL

Inserting

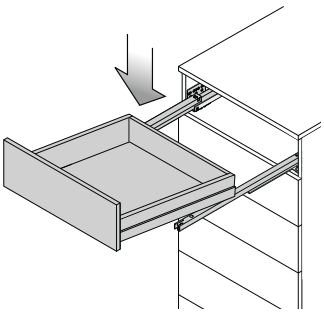

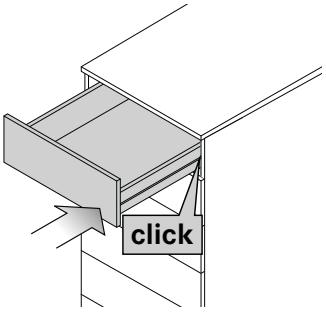

Removal

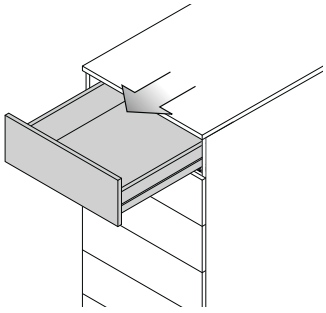

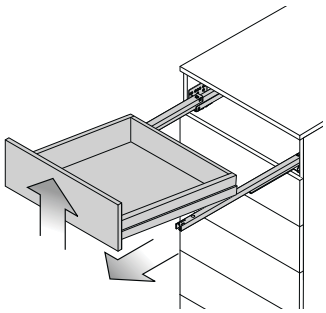

LEGEND

CRYSTAL SLIDE-IN ELEMENT FOR WOODEN BACK PANEL

Installation

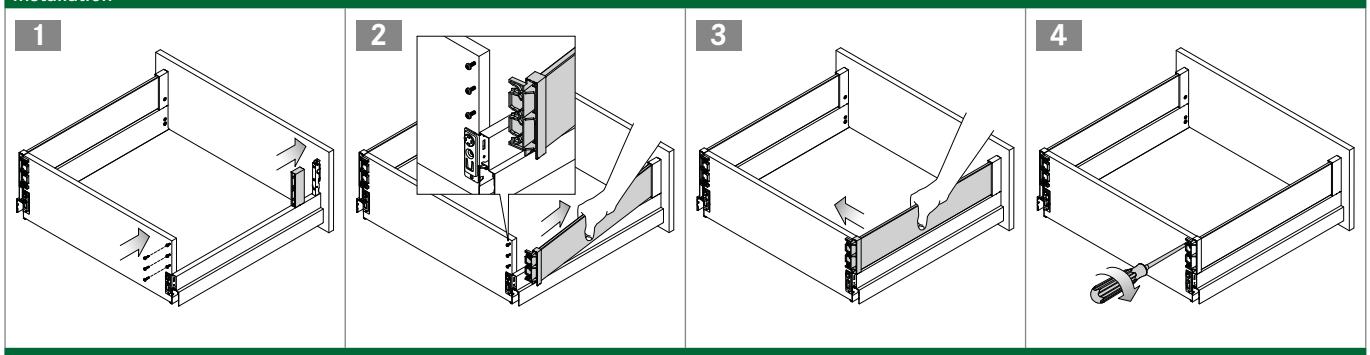

Dismounting

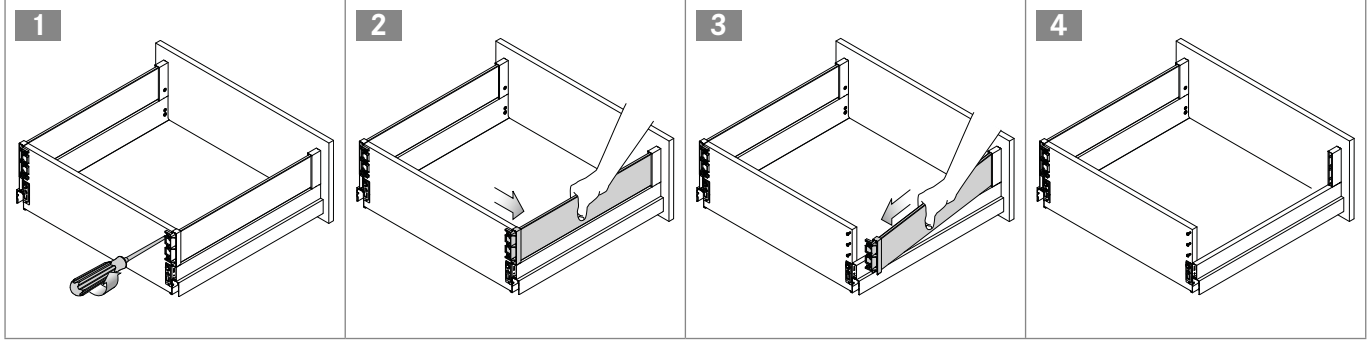

CRYSTAL PLUS SLIDE-IN ELEMENT FOR WOODEN BACK PANEL

Installation

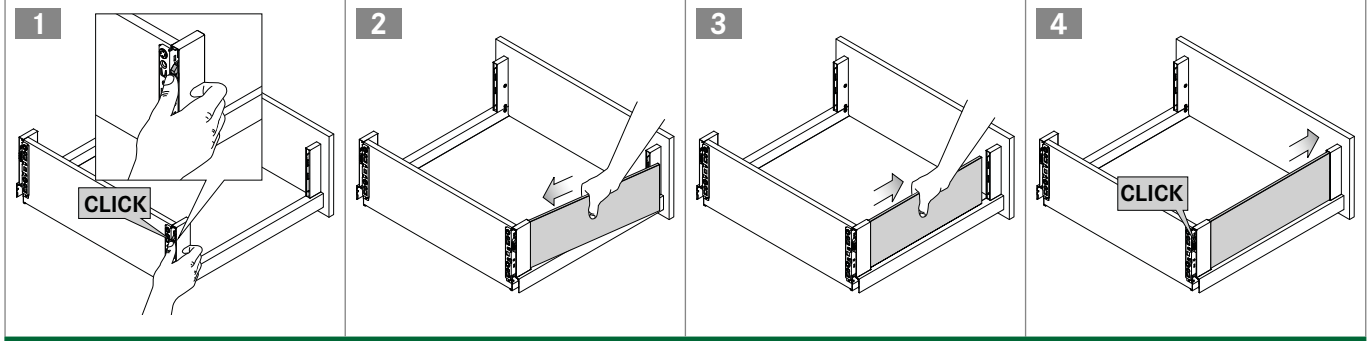

Dismounting

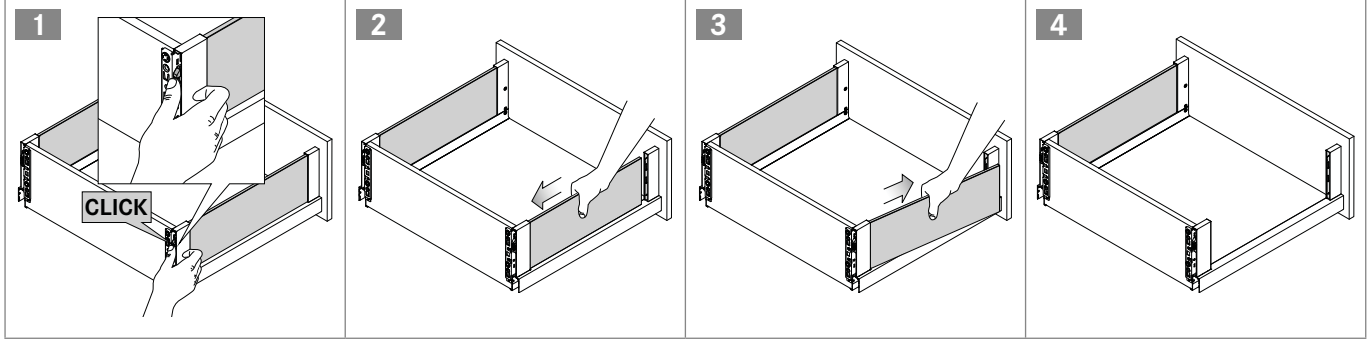

PAGE REFERENCES

Drawer sides	13	Steel back panels	56	Sensomatic	73
Slides	32	Designer panels	58	Organising systems	95
Inset panels	42	Accessories	60	Assembly technology	120

RECTANGULAR RAILING

Installation

1

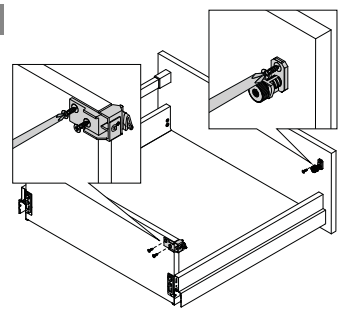

2

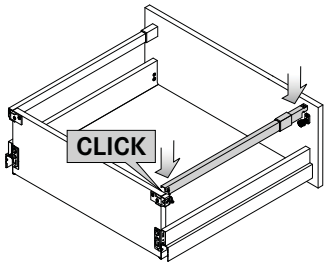

3

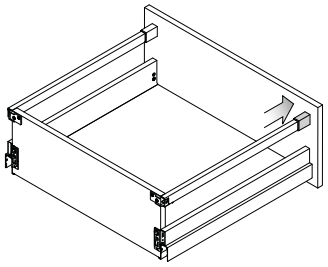

Dismounting

1

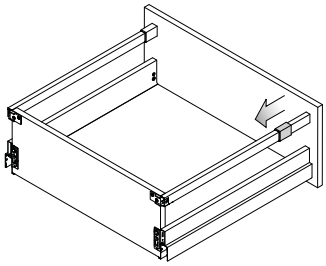

2

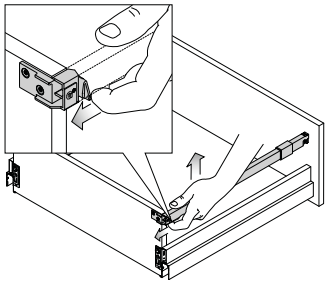

3

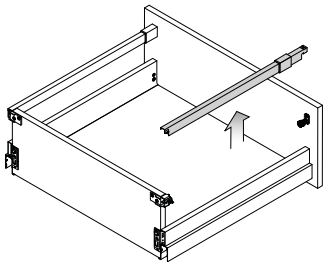

RECTANGULAR RAILING WITH FRONT SUPPORT

Installation

1

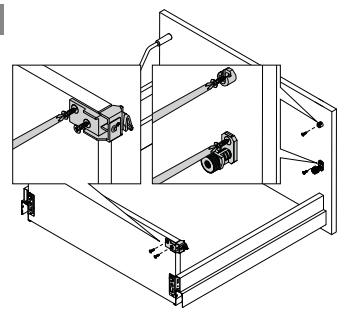

2

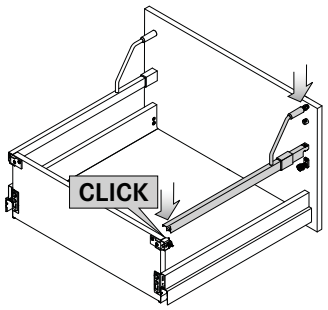

3

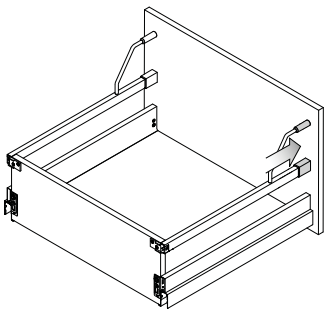

Dismounting

1

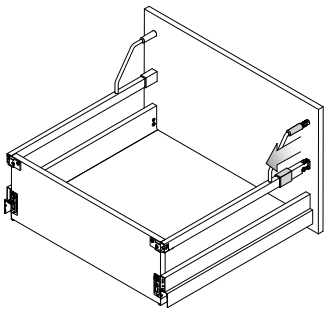

2

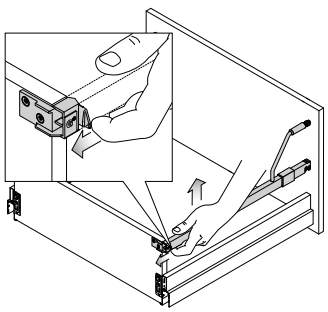

3

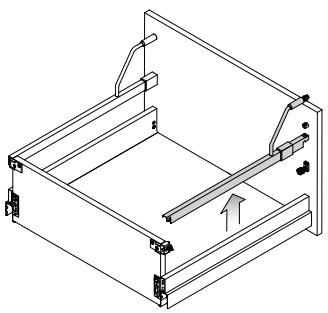

LEGEND

TIPMATIC SOFT-CLOSE

Front gap adjustment

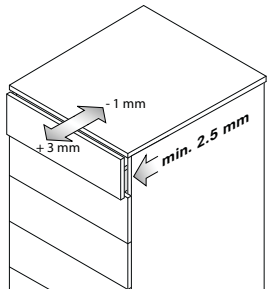

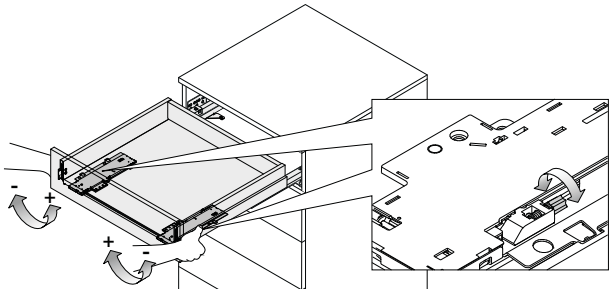

Activation force

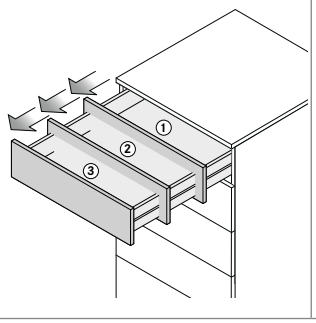

1

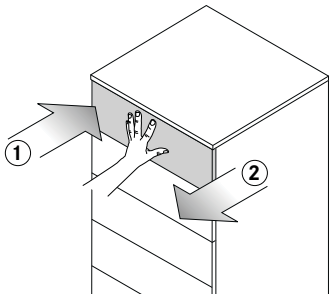

2

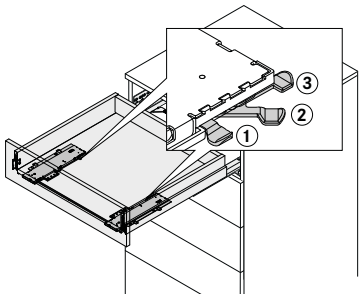

PAGE REFERENCES

Drawer sides	13	Steel back panels	56	Sensomatic	73
Slides	32	Designer panels	58	Organising systems	95
Inset panels	42	Accessories	60	Assembly technology	120

handlie.com

LEGEND

SENSOMATIC OPENING SYSTEM

Action. Reaction. Interaction. Comfort cannot be any more fascinating.

QUALITY CERTIFICATE
LGA

Ultimate movement comfort: GRASS opening systems for handle-free furniture.

Thanks to Sensomatic's automatic touch-sensitive function, a gentle trigger is enough to start the drawer movement. A light touch or pull is converted into an electric signal which starts the movement process within a fraction of a second. The action is even, precise and elegant. Sensomatic combined with Soft-close, the mechanical damping system, guarantees ultimate operating comfort. Because the two systems combine all advantages of handle-free opening with the elegance of damped closing.

NOVA PRO SENSOMATIC

Electro-mechanical opening of regular and pot drawers.
For a balance between stylish design and functional comfort.

Product designation	Page
Nova Pro Sensomatic single set	76
Standard cabinet with horizontal wooden stretcher	78
Standard cabinet with vertical wooden stretcher	80
Single drawer with overhead frame set mounting	82
Single drawer with back panel frame set mounting	84
Sink cabinet with bottom panel frame set mounting	86
Sink cabinet with side panel frame set mounting	88

Installation instructions	90

NOVA PRO SENSOMATIC

Electro-mechanical opening of regular and pot drawers.
For a balance between stylish design and functional comfort.

	Product description	Page
	Nova Pro Sensomatic single set • Complete set for a single drawer • For cabinet widths of up to 1200 mm • Easy to install • Very simple wiring (plug and play)	76
	Standard cabinet with horizontal wooden stretcher • Minimal additional space requirement between drawer back panel and cabinet • Very simple wiring (plug and play) • Just one drive unit for cabinet widths of up to 1200 mm • Large trigger range	78
	Standard cabinet with vertical wooden stretcher • Minimal additional space requirement between drawer back panel and cabinet • Very simple wiring (plug and play) • Just one drive unit for cabinet widths of up to 1200 mm • Large trigger range	80
	Single drawer with overhead frame set mounting • Minimal additional space requirement between drawer back panel and cabinet • Very simple wiring (plug and play) • Just one drive unit for cabinet widths of up to 1200 mm • Large trigger range	82

handlie.com

	Product description	Page
	Single drawer with back panel frame set mounting • Minimal additional space requirement between drawer back panel and cabinet • Very simple wiring (plug and play) • Just one drive unit for cabinet widths of up to 1200 mm • Large trigger range	84
	Sink cabinet with bottom panel frame set mounting • Minimal additional space requirement between drawer back panel and cabinet • Very simple wiring (plug and play) • Just one drive unit for cabinet widths of up to 1200 mm • Large trigger range	86
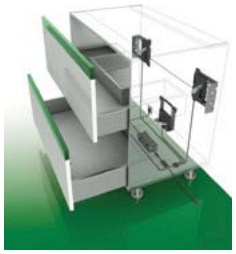	**Sink cabinet with side panel frame set mounting** • Minimal additional space requirement between drawer back panel and cabinet • Very simple wiring (plug and play) • Just one drive unit for cabinet widths of up to 1200 mm • Large trigger range	88

NOVA PRO SENSOMATIC
Single set

- Electro-mechanical opening system
- Combines handle-free opening with Soft-close damping system
- 1 drive unit for all weight classes
- Easy to fit
- Simple plug and play wiring
- Small additional installation depth
- Single sets include all components necessary for installation
- Ideal for heavy pot drawers and waste separating systems

- **Note:**
  Sets for other countries available upon request

ORDER INFORMATION

Sensomatic single set	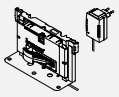	
	Item No.	PU
for Nova Pro	**F121**100**983**	201

1 set includes:

1 drive unit (1x)

2 installation set (1x)

3 Power supply unit with connector (1x)
(Central Europe, DE, FR, IT, CH, ES, RU, PT, NL)

4 spring-loaded front buffers (4x)

drilling and installation instructions (1x)

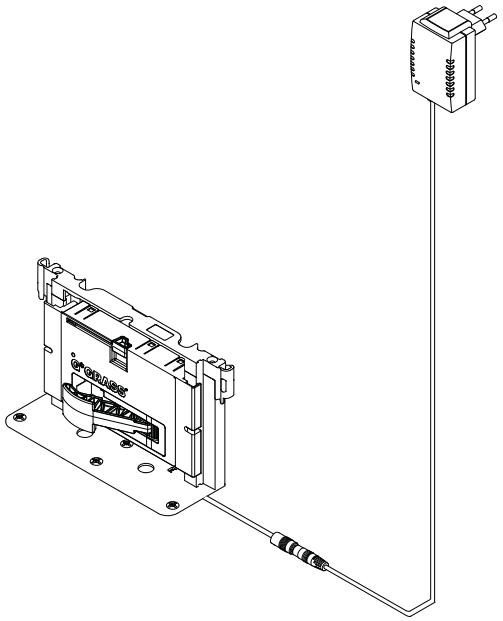

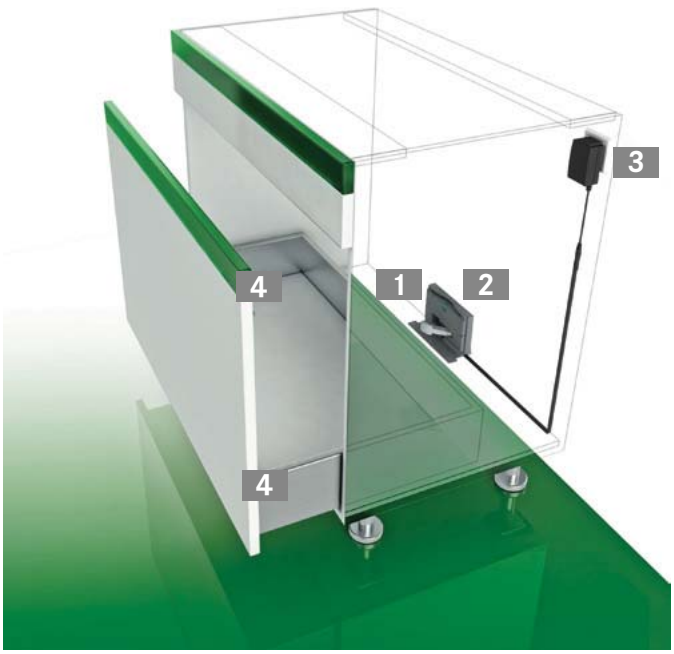

PAGE REFERENCES

Drawer sides	13	Steel back panels	56	Organising systems	95
Slides	32	Accessories	60	Assembly technology	120
Inset panels	42	Installation instructions	90	Packaging code	131

handlie.com

INSTALLATION INFORMATION

Installation dimensions

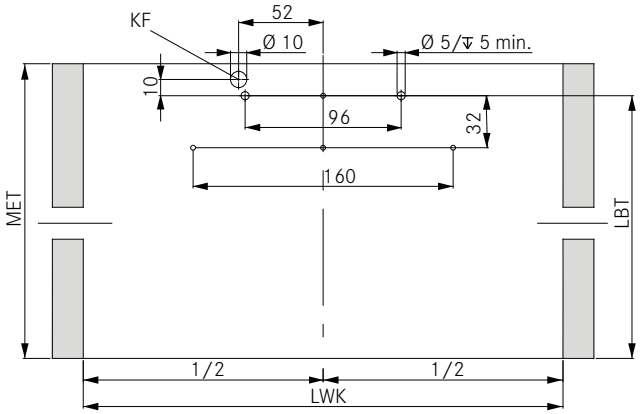

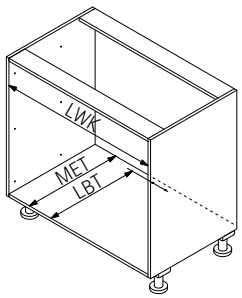

RW	MET	LBT
Wood	NL + 20*	NL + 5*

* When using front buffer 2.2 mm MET = NL + 21, LBT = NL + 6

Installation set

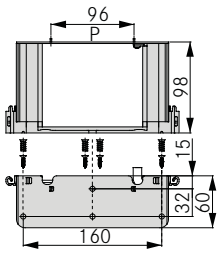

Position of drive unit

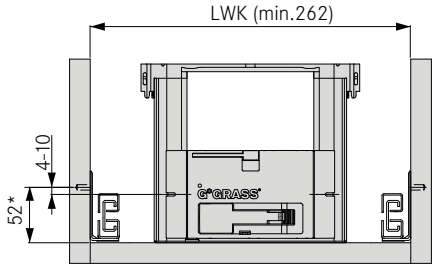

* Recommendation/Minimum dimension: 49.5 mm

Position of front buffer

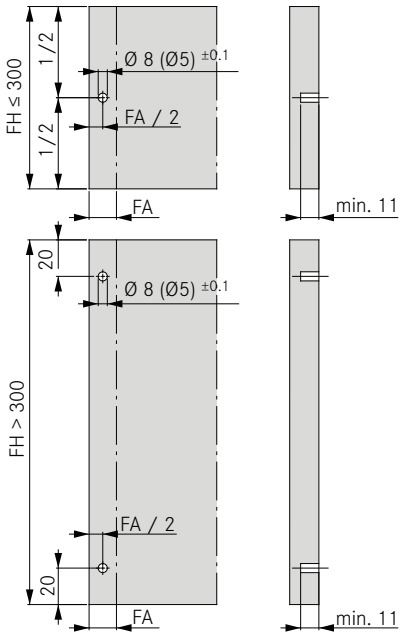

Note:
When using Nova Pro slides 70 kg, 4 front buffers must be integrated into the front.

LEGEND

FA	Front overlay
FH	Height of front
KF	Cable routing
LBT	Depth of hole pattern
LWK	Inside cabinet width
MET	Minimum installation depth
NL	Nominal length
P	Positioning aid
RW	Back panel

NOVA PRO SENSOMATIC

Standard cabinet horizontal wooden stretcher

ORDER INFORMATION

1 Drive unit

	Item No.	PU
for Nova Pro	F121100268	607

2 Frame sides including frame side cable

Length	Item No.	PU
653	F121100284	207
750	F121100285	207
1170	F121100286	207

3 Fastening set consisting of: Items 3a (2x) and item 3b (2x)

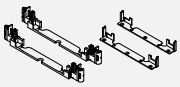

	Item No.	PU
	F121100610	507

3a Frame connector

	Item No.	PU
	F121100282	211

3b Fixing brackets top/bottom

	Item No.	PU
	F121100270	211

4 Power supply unit

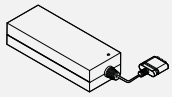

	Item No.	PU
	F121100269	607

5 Power supply unit holder

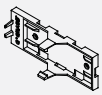

	Item No.	PU
	F121100604	507

6 Front buffer, spring-loaded

Ø	Front gap	Item No.	PU
5	2.2	F121100294	223
	3	F121100295	223
8	2.2	F121100297	223
	3	F121100298	223

7 Connection cable with 2-way adapter

Length	Item No.	PU
600	F121100288	207
1000	F121100289	207
2000	F121100291	207

8 Power supply cable

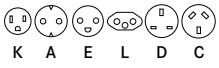

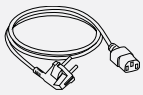

Plug	Item No.	PU
Power supply cable K (USA, CAN)	F120069760	207
Power supply cable K (JP)	F120072445	207
Power supply cable A (DE, ES, FR, IT, RU, NL, SE)	F120069761	207
Power supply cable E (DK)	F120069763	207
Power supply cable L (CH)	F120069765	207
Power supply cable D (UK, AE, MY)	F120069766	207
Mains cable C (AU, NZ)	F120078669	207
without plug	F120069767	207

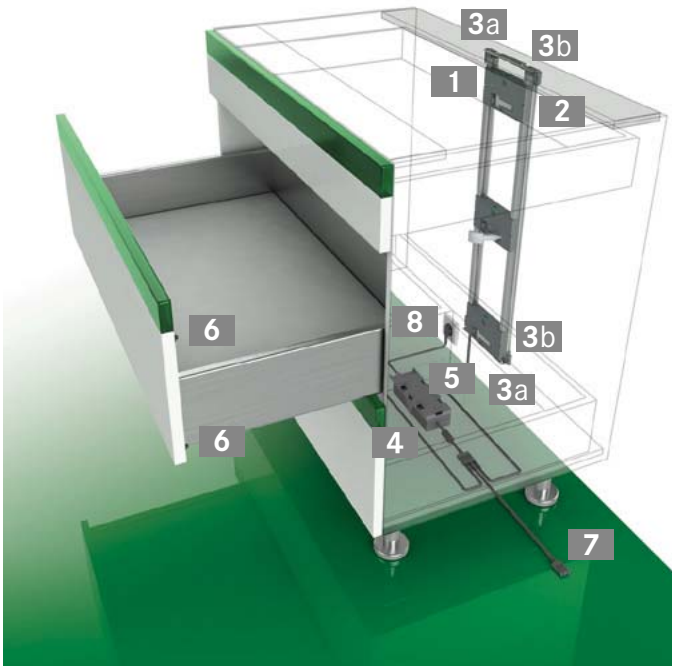

PAGE REFERENCES

Drawer sides	13	Steel back panels	56	Organising systems	95
Slides	32	Accessories	60	Assembly technology	120
Inset panels	42	Installation instructions	90	Packaging code	131

handlie.com

INSTALLATION INFORMATION

Installation dimensions

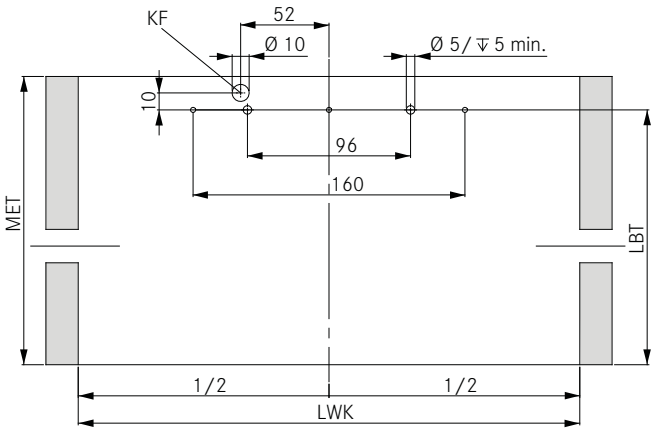

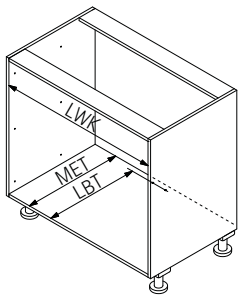

RW	MET	LBT
Wood	NL + 20*	NL + 5*

* When using front buffer 2.2 mm MET = NL + 21, LBT = NL + 6

Fixing brackets top/bottom

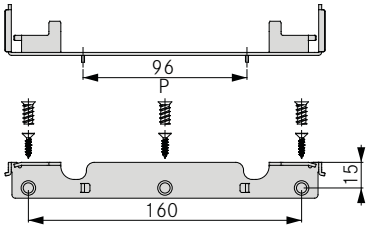

Position of drive unit

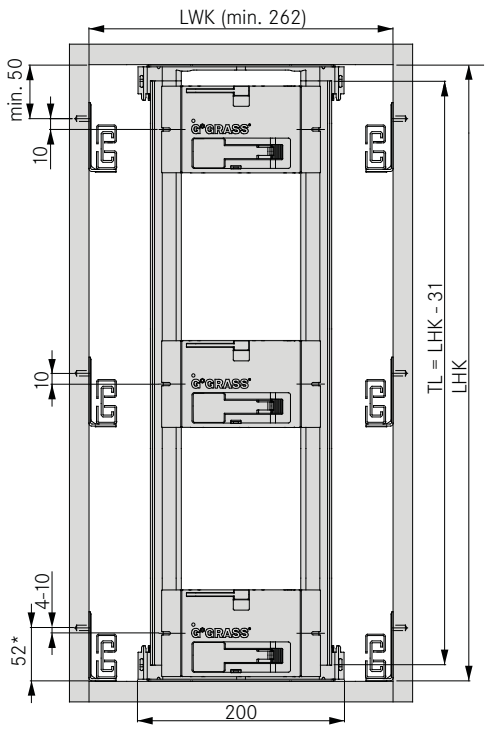

* Recommendation/Minimum dimension: 49.5 mm

Position of front buffer

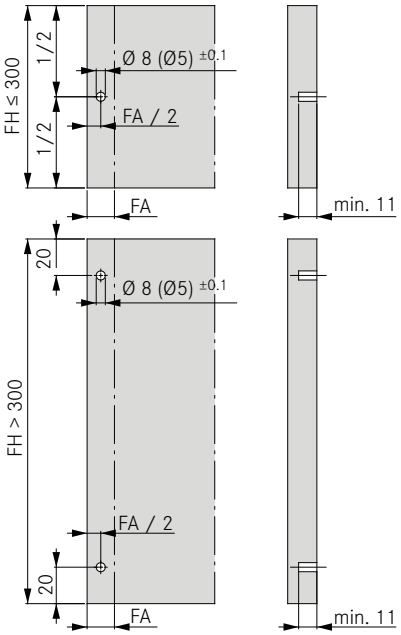

Note:
When using Nova Pro slides 70 kg, 4 front buffers must be integrated into the front.

LEGEND

FA	Front overlay
FH	Height of front
KF	Cable routing
LBT	Depth of hole pattern
LHK	Inside cabinet height
LWK	Inside cabinet width
MET	Minimum installation depth
NL	Nominal length
P	Positioning aid
RW	Back panel
TL	Length of frame side

NOVA PRO SENSOMATIC

Standard cabinet vertical wooden stretcher

ORDER INFORMATION

1 Drive unit

	Item No.	PU
for Nova Pro	**F121**100**268**	607

2 Frame sides including frame side cable

Length	Item No.	PU
653	**F121**100**284**	207
750	**F121**100**285**	207
1170	**F121**100**286**	207

3 Frame connector

	Item No.	PU
	F121100**282**	211

4 Fixing brackets top/bottom

	Item No.	PU
	F121100**270**	211

5 Fixing bracket, back inside mounted

	Item No.	PU
	F121100**275**	207

6 Power supply unit

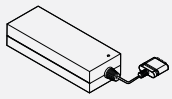

	Item No.	PU
	F121100**269**	607

7 Power supply unit holder

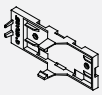

	Item No.	PU
	F121100**604**	507

8 Front buffer, spring-loaded

Ø	Front gap	Item No.	PU
5	2.2	**F121**100**294**	223
	3	**F121**100**295**	223
8	2.2	**F121**100**297**	223
	3	**F121**100**298**	223

9 Connection cable with 2-way adapter

Length	Item No.	PU
600	**F121**100**288**	207
1000	**F121**100**289**	207
2000	**F121**100**291**	207

10 Power supply cable

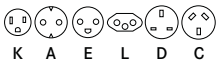

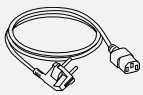

Plug	Item No.	PU
Power supply cable K (USA, CAN)	**F120**069**760**	207
Power supply cable K (JP)	**F120**072**445**	207
Power supply cable A (DE, ES, FR, IT, RU, NL, SE)	**F120**069**761**	207
Power supply cable E (DK)	**F120**069**763**	207
Power supply cable L (CH)	**F120**069**765**	207
Power supply cable D (UK, AE, MY)	**F120**069**766**	207
Mains cable C (AU, NZ)	**F120**078**669**	207
without plug	**F120**069**767**	207

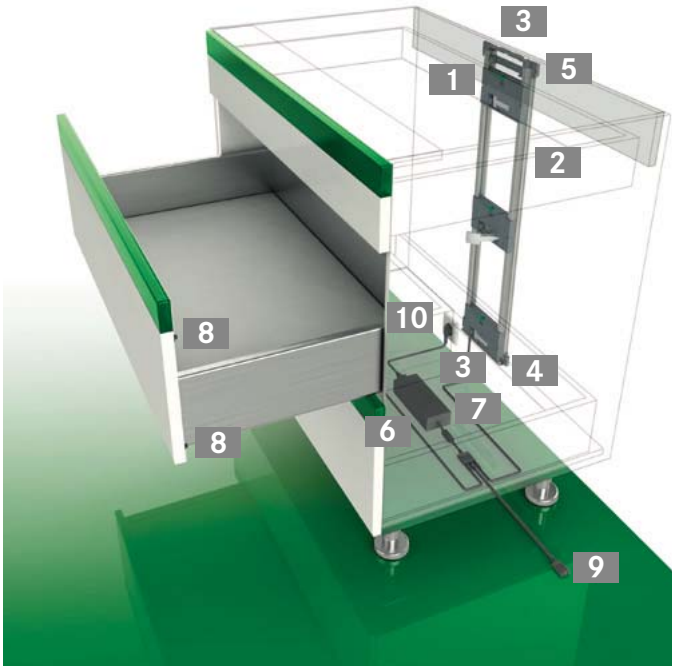

PAGE REFERENCES

Drawer sides	13	Steel back panels	56	Organising systems	95
Slides	32	Accessories	60	Assembly technology	120
Inset panels	42	Installation instructions	90	Packaging code	131

handlie.com

INSTALLATION INFORMATION

Installation dimensions

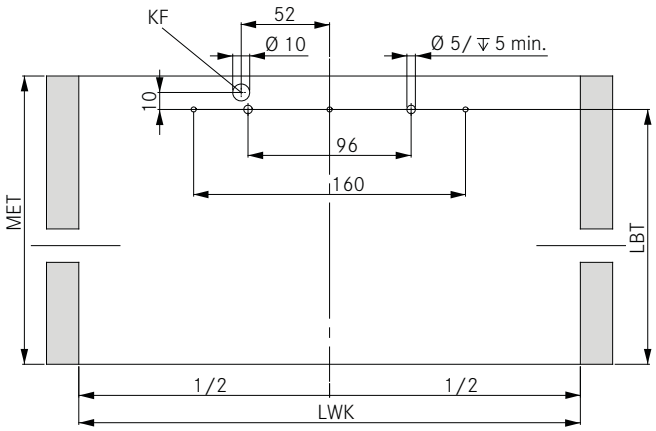

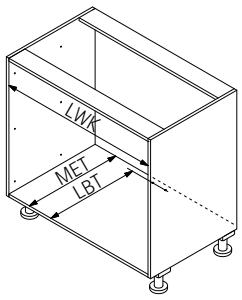

RW	MET	LBT
Wood	NL + 20*	NL + 5*

* When using front buffer 2.2 mm MET = NL + 21, LBT = NL + 6

Fixing brackets top/bottom

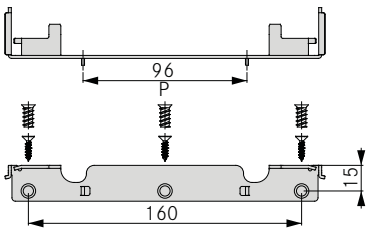

Fixing bracket, back inside mounted

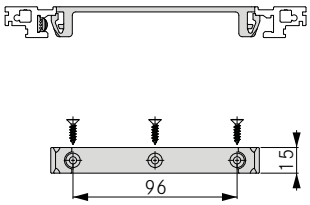

Position of drive unit

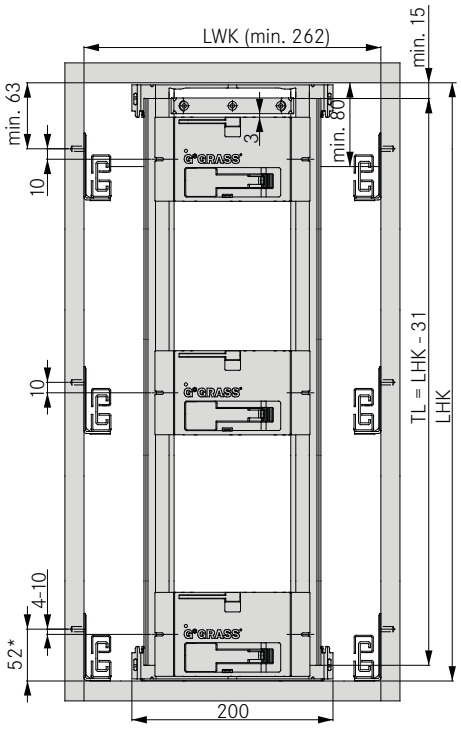

* Recommendation/Minimum dimension: 49.5 mm

Position of front buffer

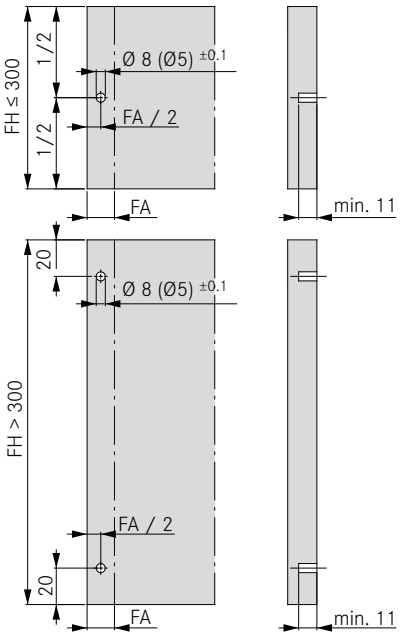

Note:
When using Nova Pro slides 70 kg, 4 front buffers must be integrated into the front.

LEGEND

FA	Front overlay
FH	Height of front
KF	Cable routing
LBT	Depth of hole pattern
LHK	Inside cabinet height
LWK	Inside cabinet width
MET	Minimum installation depth
NL	Nominal length
P	Positioning aid
RW	Back panel
TL	Length of frame side

NOVA PRO SENSOMATIC

Single drawer with overhead frame set mounting

ORDER INFORMATION

1 Drive unit

	Item No.	PU
for Nova Pro	F121100268	607

2 Installation set

	Item No.	PU
	F121100273	207

3 Power supply unit

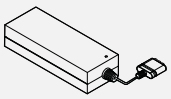

	Item No.	PU
	F121100269	607

4 Power supply unit holder

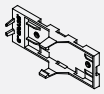

	Item No.	PU
	F121100604	507

5 Front buffer, spring-loaded

Ø	Front gap	Item No.	PU
5	2.2	F121100294	223
	3	F121100295	223
8	2.2	F121100297	223
	3	F121100298	223

6 Connection cable with 2-way adapter

Length	Item No.	PU
600	F121100288	207
1000	F121100289	207
2000	F121100291	207

7 Power supply cable

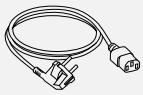

Plug	Item No.	PU
Power supply cable K (USA, CAN)	F120069760	207
Power supply cable K (JP)	F120072445	207
Power supply cable A (DE, ES, FR, IT, RU, NL, SE)	F120069761	207
Power supply cable E (DK)	F120069763	207
Power supply cable L (CH)	F120069765	207
Power supply cable D (UK, AE, MY)	F120069766	207
Mains cable C (AU, NZ)	F120078669	207
without plug	F120069767	207

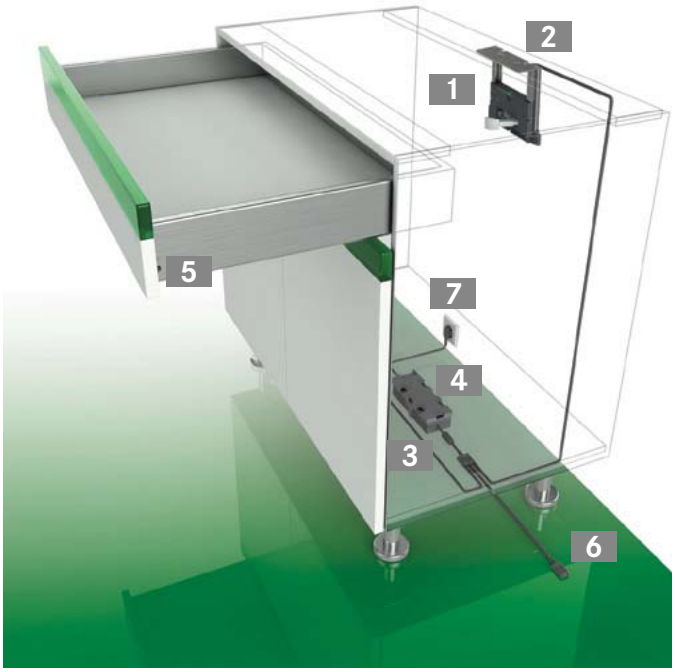

PAGE REFERENCES

Drawer sides	13	Steel back panels	56	Organising systems	95
Slides	32	Accessories	60	Assembly technology	120
Inset panels	42	Installation instructions	90	Packaging code	131

handlie.com

INSTALLATION INFORMATION

Installation dimensions

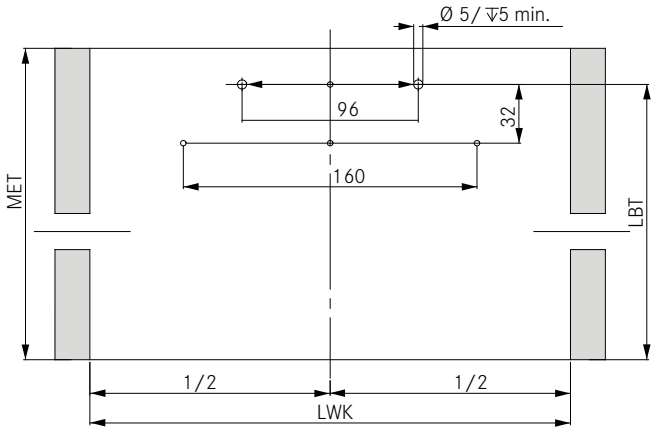

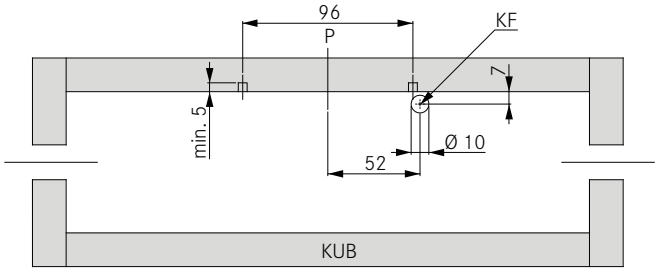

RW	MET	LBT
Wood	NL + 20*	NL + 5*

* When using front buffer 2.2 mm MET = NL + 21, LBT = NL + 6

Installation set

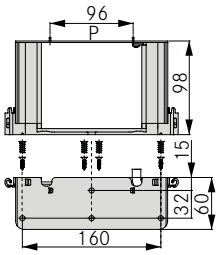

Position of drive unit

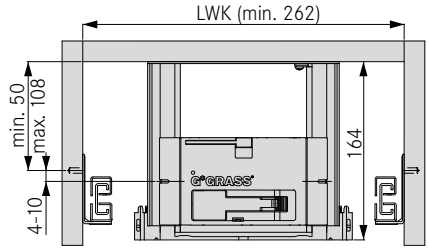

Position of front buffer

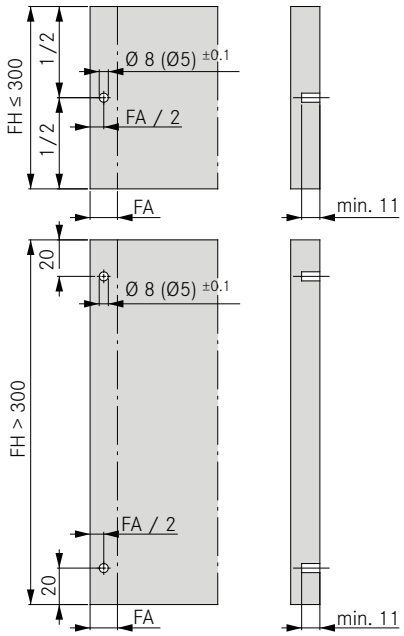

Note:
When using Nova Pro slides 70 kg, 4 front buffers must be integrated into the front.

LEGEND

FA	Front overlay
FH	Height of front
KF	Cable routing
KUB	Cabinet base

LBT	Depth of hole pattern
LWK	Inside cabinet width
MET	Minimum installation depth
NL	Nominal length

P	Positioning aid
RW	Back panel

NOVA PRO SENSOMATIC

Single drawer with back panel frame set mounting

ORDER INFORMATION

1 Drive unit

	Item No.	PU
for Nova Pro	F121100268	607

2 Frame sides for back panel frame set mounting including hole drilling

	Item No.	PU
	F121100283	207

3 Frame connector

	Item No.	PU
	F121100282	211

4 Power supply unit

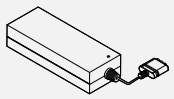

	Item No.	PU
	F121100269	607

5 Power supply unit holder

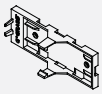

	Item No.	PU
	F121100604	507

6 Front buffer, spring-loaded

Ø	Front gap	Item No.	PU
5	2.2	F121100294	223
	3	F121100295	223
8	2.2	F121100297	223
	3	F121100298	223

7 Connection cable with 2-way adapter

Length	Item No.	PU
600	F121100288	207
1000	F121100289	207
2000	F121100291	207

8 Power supply cable

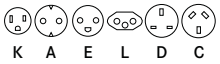

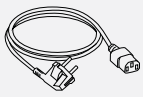

Plug	Item No.	PU
Power supply cable K (USA, CAN)	F120069760	207
Power supply cable K (JP)	F120072445	207
Power supply cable A (DE, ES, FR, IT, RU, NL, SE)	F120069761	207
Power supply cable E (DK)	F120069763	207
Power supply cable L (CH)	F120069765	207
Power supply cable D (UK, AE, MY)	F120069766	207
Mains cable C (AU, NZ)	F120078669	207
without plug	F120069767	207

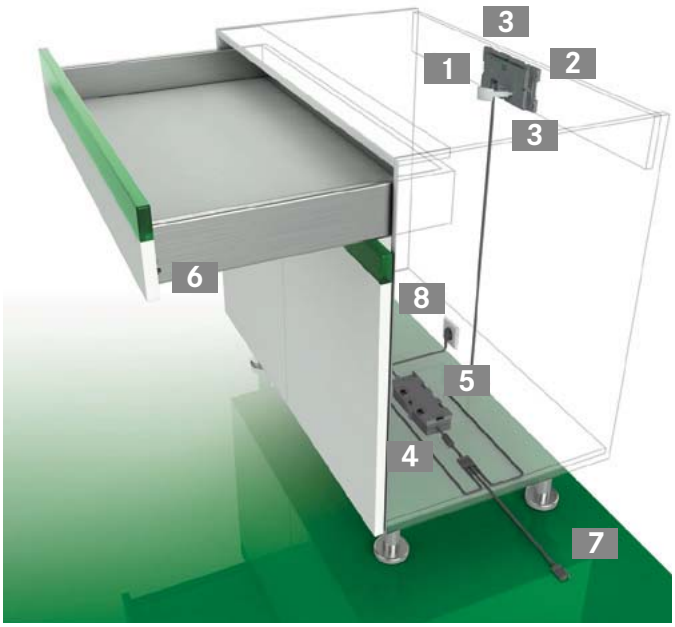

PAGE REFERENCES

Drawer sides	13	Steel back panels	56	Organising systems	95
Slides	32	Accessories	60	Assembly technology	120
Inset panels	42	Installation instructions	90	Packaging code	131

handlie.com

INSTALLATION INFORMATION

Installation dimensions

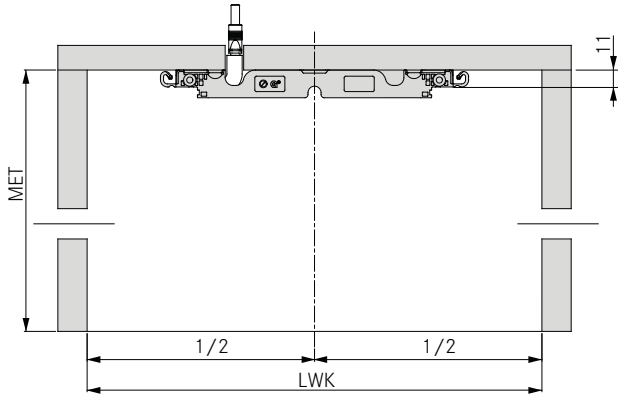

RW	MET
Wood	NL + 20*

* When using front buffer 2.2 mm MET = NL + 21

Frame sides

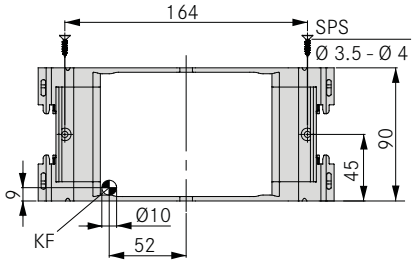

Position of drive unit

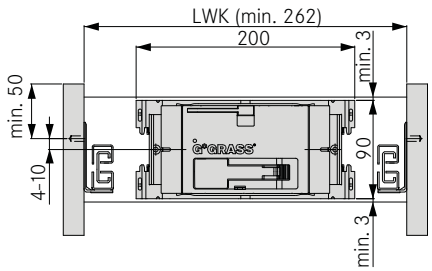

Position of front buffer

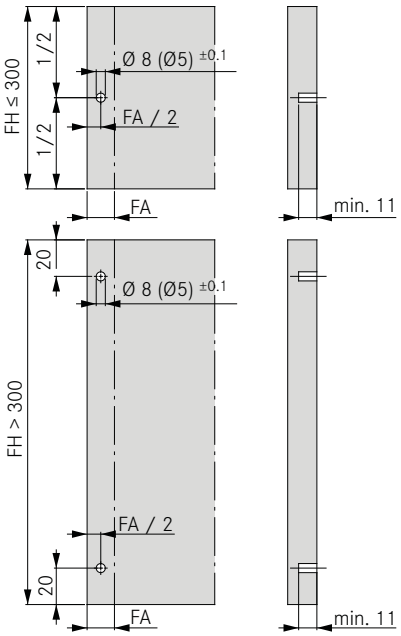

Note:
When using Nova Pro slides 70 kg, 4 front buffers must be integrated into the front.

LEGEND

FA	Front overlay
FH	Height of front
KF	Cable routing
LWK	Inside cabinet width
MET	Minimum installation depth
NL	Nominal length
RW	Back panel
SPS	Chipboard screw

NOVA PRO SENSOMATIC

Sink cabinet with bottom panel frame set mounting

ORDER INFORMATION

1 Drive unit

	Item No.	PU
for Nova Pro	F121100268	607

2 Installation set

	Item No.	PU
	F121100273	207

3 Power supply unit

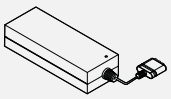

	Item No.	PU
	F121100269	607

4 Power supply unit holder

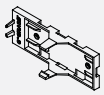

	Item No.	PU
	F121100604	507

5 Front buffer, spring-loaded

Ø	Front gap	Item No.	PU
5	2.2	F121100294	223
	3	F121100295	223
8	2.2	F121100297	223
	3	F121100298	223

6 4-way adapter

	Item No.	PU
	F121100293	207

7 Connection cable with 2-way adapter

Length	Item No.	PU
600	F121100288	207
1000	F121100289	207
2000	F121100291	207

8 Power supply cable

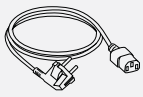

Plug	Item No.	PU
Power supply cable K (USA, CAN)	F120069760	207
Power supply cable K (JP)	F120072445	207
Power supply cable A (DE, ES, FR, IT, RU, NL, SE)	F120069761	207
Power supply cable E (DK)	F120069763	207
Power supply cable L (CH)	F120069765	207
Power supply cable D (UK, AE, MY)	F120069766	207
Mains cable C (AU, NZ)	F120078669	207
without plug	F120069767	207

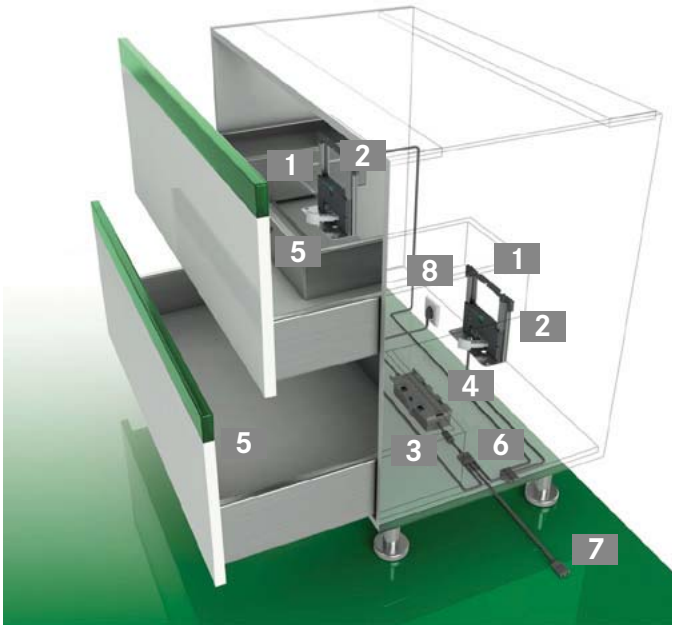

PAGE REFERENCES

Drawer sides	13	Steel back panels	56	Organising systems	95
Slides	32	Accessories	60	Assembly technology	120
Inset panels	42	Installation instructions	90	Packaging code	131

handlie.com

INSTALLATION INFORMATION

Installation dimensions – bottom panel frame set mounting

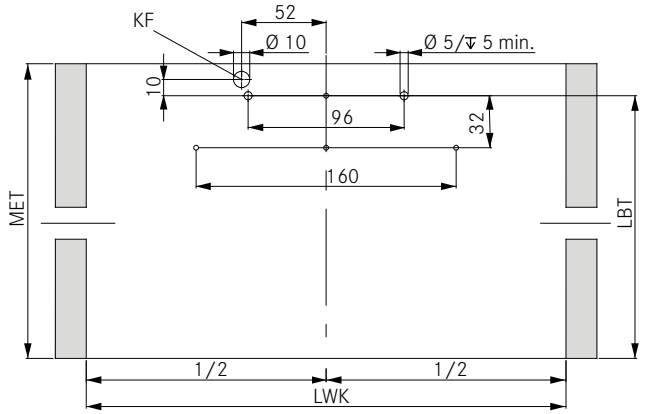

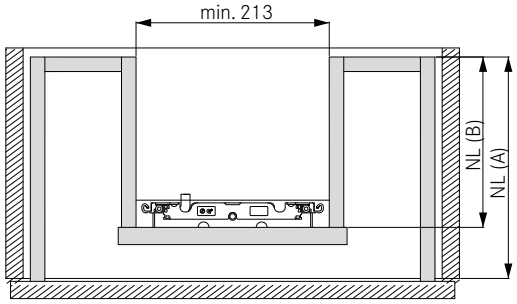

RW	MET	LBT	LBTS
Wood	NL + 20*	NL + 5*	NL(A)-NL(B)+9

* When using front buffer 2.2 mm MET = NL + 21, LBT = NL + 6

Installation set

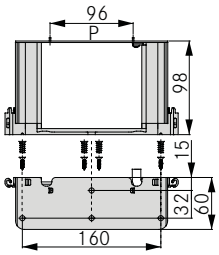

Sink cabinet installation

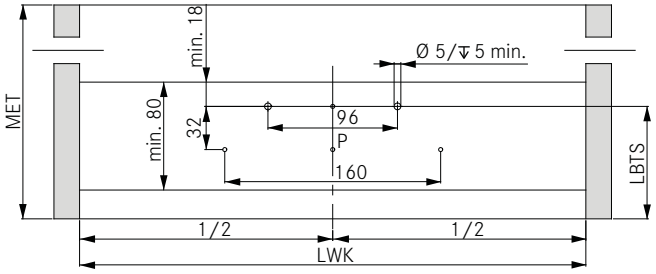

Position of drive unit

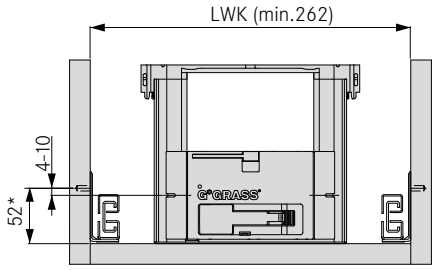

* Recommendation/Minimum dimension: 49.5 mm

Position of front buffer

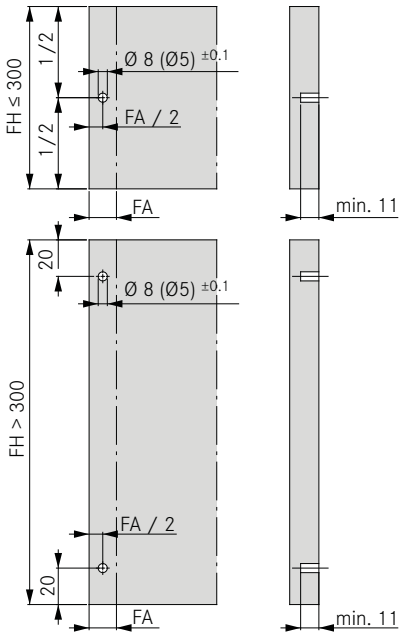

Note:
When using Nova Pro slides 70 kg, 4 front buffers must be integrated into the front.

LEGEND

FA	Front overlay
FH	Height of front
KF	Cable routing
LBT	Depth of hole pattern
LBTS	Sink drawer, depth of hole pattern
LWK	Inside cabinet width
MET	Minimum installation depth
NL	Nominal length
P	Positioning aid
RW	Back panel

NOVA PRO SENSOMATIC

Sink cabinet with side panel frame set mounting

ORDER INFORMATION

1 Drive unit

	Item No.	PU
for Nova Pro	F121100268	607

2 Installation set

	Item No.	PU
	F121100273	207

3 Power supply unit

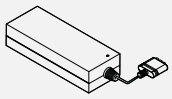

	Item No.	PU
	F121100269	607

4 Power supply unit holder

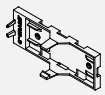

	Item No.	PU
	F121100604	507

5 Front buffer, spring-loaded

Ø	Front gap	Item No.	PU
5	2.2	F121100294	223
	3	F121100295	223
8	2.2	F121100297	223
	3	F121100298	223

6 Synchronisation cable 10 m

	Item No.	PU
	F121100287	207

7 4-way adapter

	Item No.	PU
	F121100293	207

8 Connection cable with 2-way adapter

Length	Item No.	PU
600	F121100288	207
1000	F121100289	207
2000	F121100291	207

9 Power supply cable

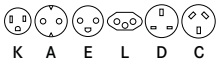

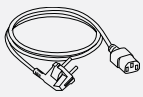

Plug	Item No.	PU
Power supply cable K (USA, CAN)	F120069760	207
Power supply cable K (JP)	F120072445	207
Power supply cable A (DE, ES, FR, IT, RU, NL, SE)	F120069761	207
Power supply cable E (DK)	F120069763	207
Power supply cable L (CH)	F120069765	207
Power supply cable D (UK, AE, MY)	F120069766	207
Mains cable C (AU, NZ)	F120078669	207
without plug	F120069767	207

NOTE

Suitable from NL 350

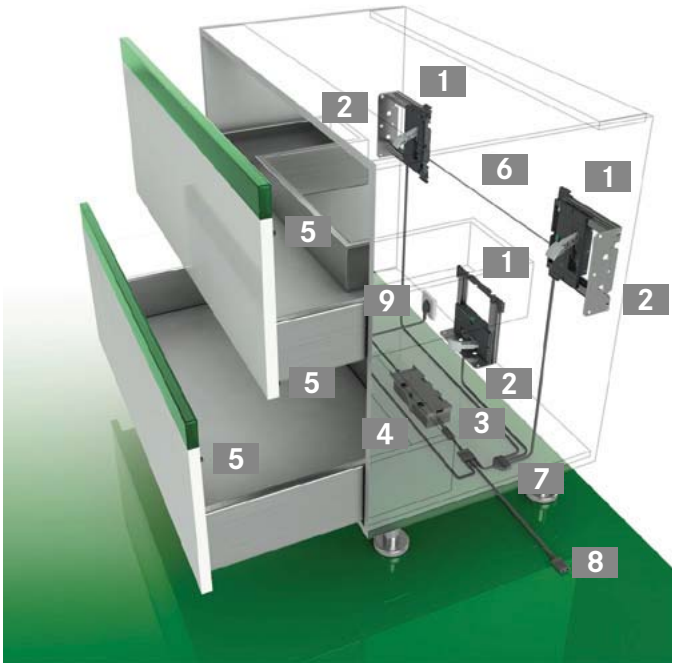

PAGE REFERENCES

Drawer sides	13	Steel back panels	56	Organising systems	95
Slides	32	Accessories	60	Assembly technology	120
Inset panels	42	Installation instructions	90	Packaging code	131

handlie.com

INSTALLATION INFORMATION

Installation dimensions – bottom panel frame set mounting

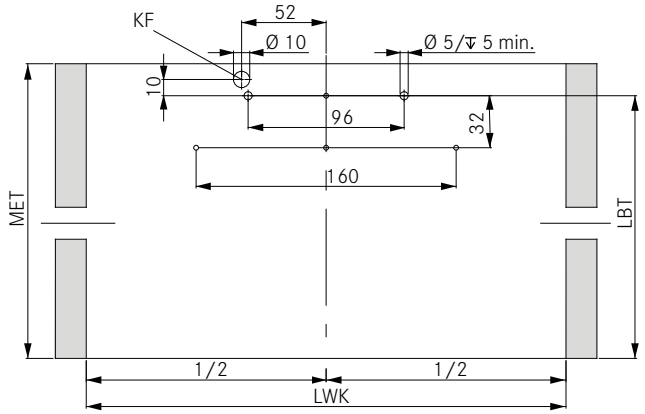

Installation dimensions – side panel frame set mounting

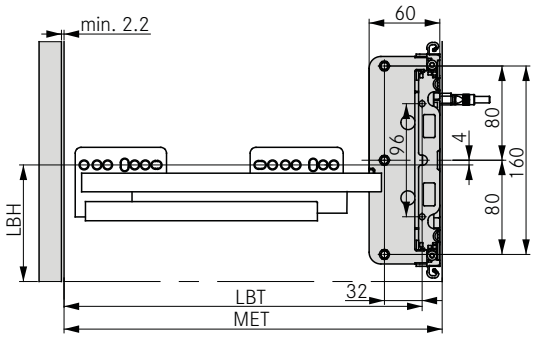

RW	MET	LBT	
Wood	NL + 21	NL + 6	

Installation set

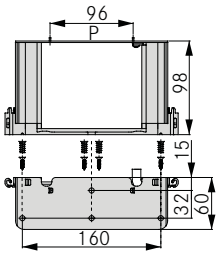

Position of drive unit, bottom panel frame set mounting

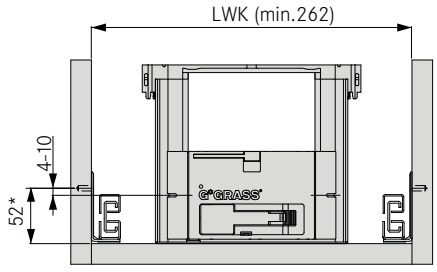

* Recommendation/Minimum dimension: 49.5 mm

Position of drive unit, side panel frame set mounting

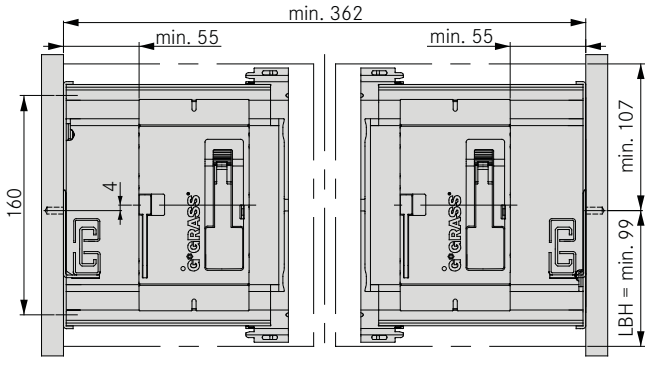

Position of front buffer

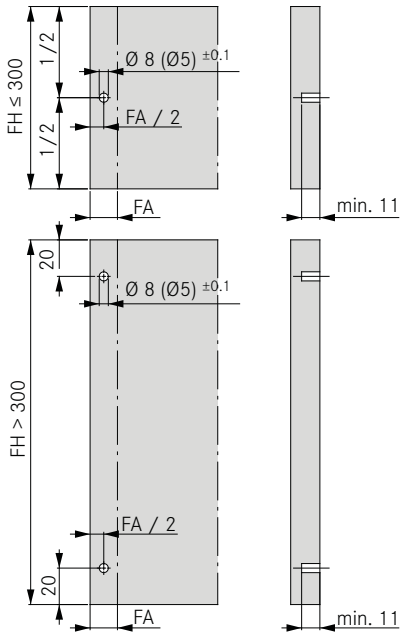

Note:
When using Nova Pro slides 70 kg, 4 front buffers must be integrated into the front.

LEGEND

FA	Front overlay
FH	Height of front
KF	Cable routing
LBH	Height of hole pattern
LBT	Depth of hole pattern
LWK	Inside cabinet width
MET	Minimum installation depth
NL	Nominal length
P	Positioning aid
RW	Back panel

INSTALLATION INSTRUCTIONS

Stretcher installation	Standard cabinet installation with horiztontal wooden stretcher	Standard cabinet installation with vertical wooden stretcher
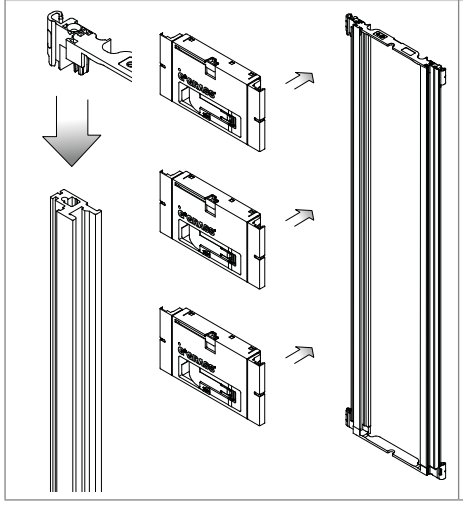	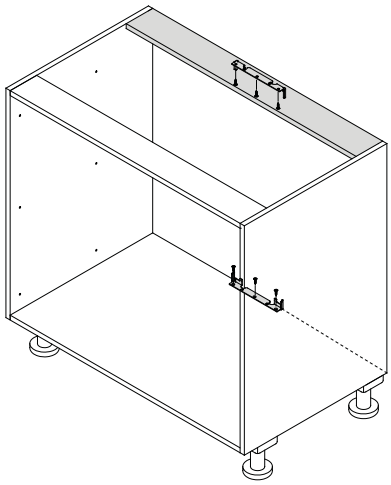	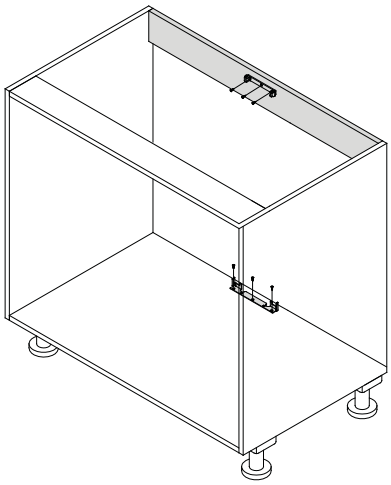

Overhead frame set mounting, single drawer	Back panel frame set mounting, single drawer
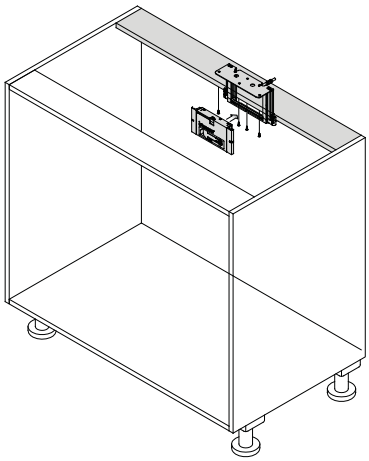	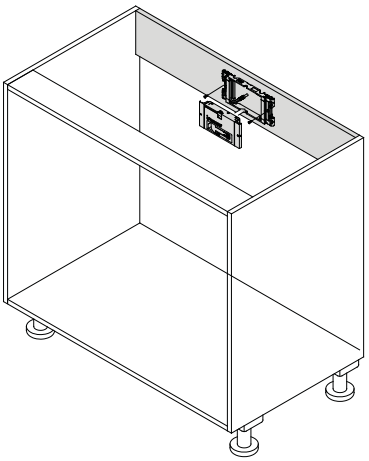

Bottom panel frame set mounting, sink cabinet	Side panel frame set mounting, sink cabinet
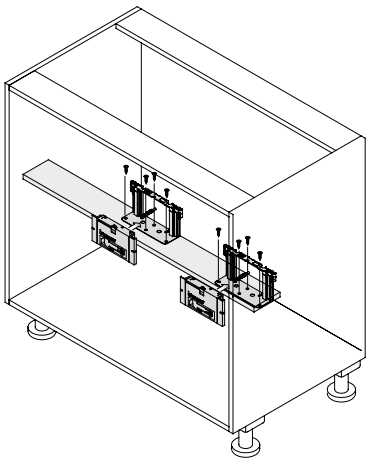	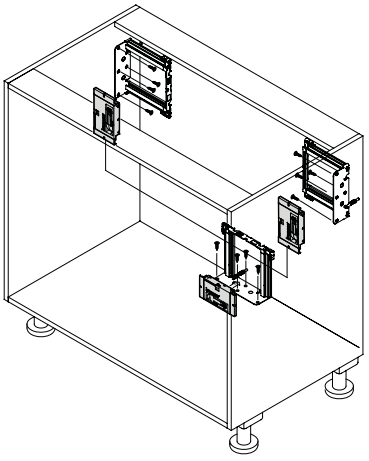

PAGE REFERENCES

Horizontal wooden stretcher	78	Back panel frame set mounting	84	Drawer sides	13
Vertical wooden stretcher	80	Bottom panel frame set mounting	86	Slides	32
Overhead frame set mounting	82	Side panel frame set mounting	88	Assembly technology	120

handlie.com

INSTALLATION INSTRUCTIONS

Cutting stretcher to length (horizontal and vertical wooden stretcher)

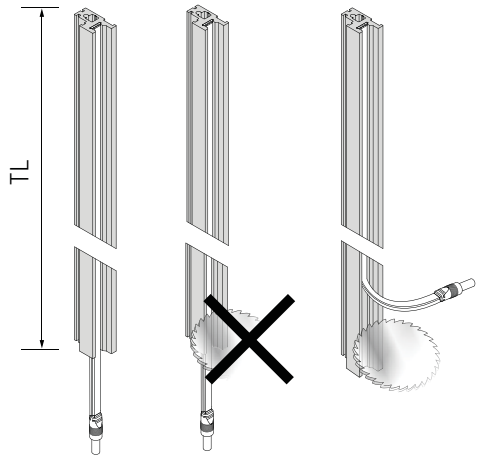

Installation of drive unit

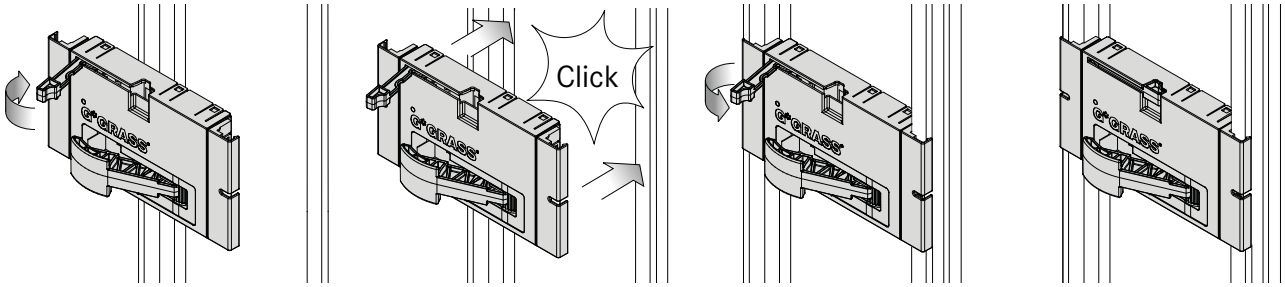

Wiring (connection sequence)

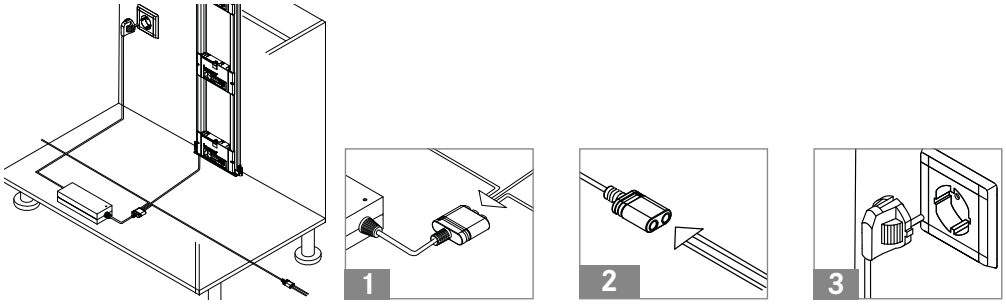

Inserting front buffer

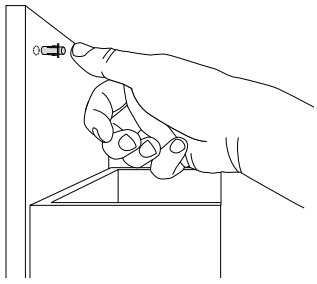

Do not drive in or glue!

Installing the synchronisation cable

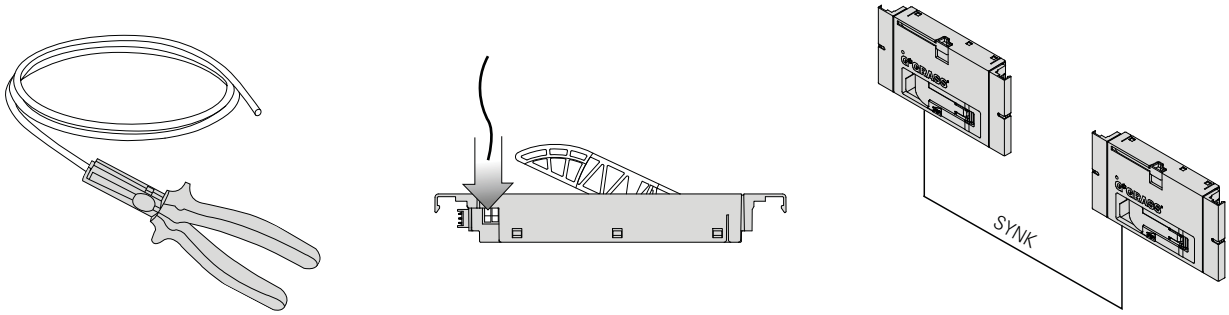

LEGEND

SYNK	Synchronisation cable
TL	Length of frame side

NOVA PRO SENSOMATIC
Dismantling instructions

DISMOUNTING

Dismantling the drive unit

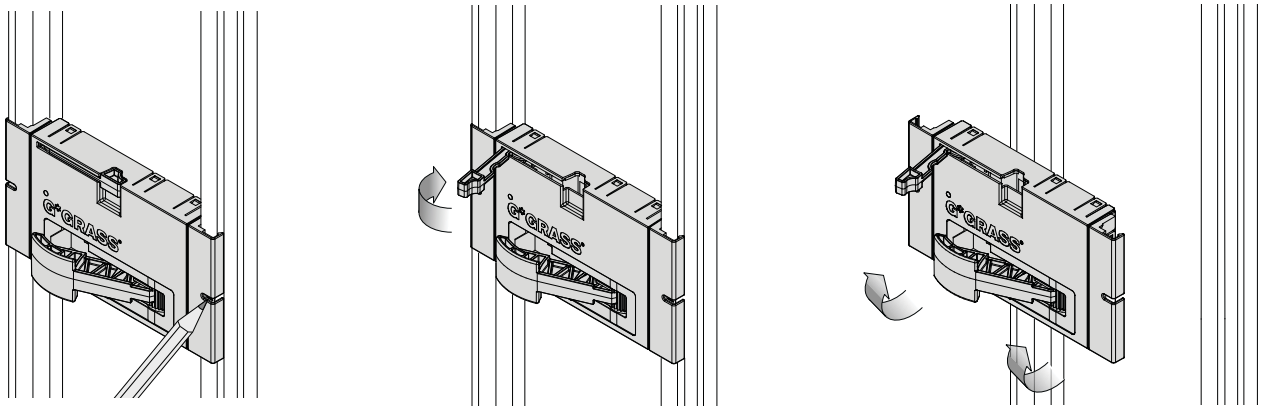

Dismantling the frame sides

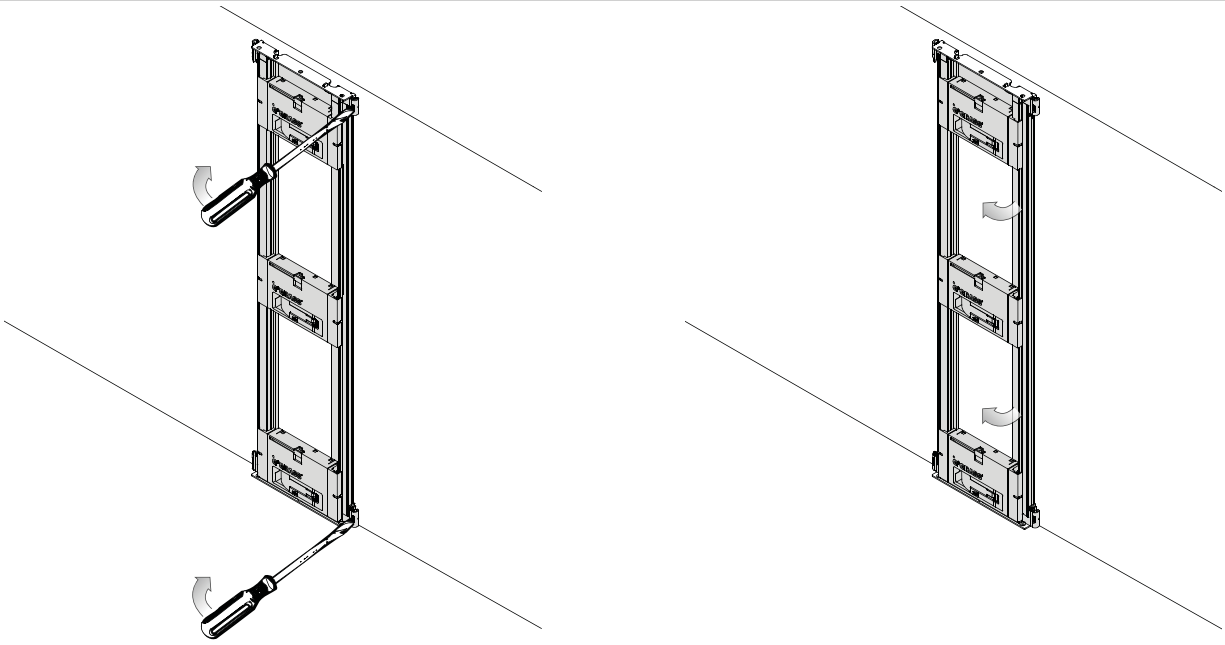

Dismantling the synchronisation cable

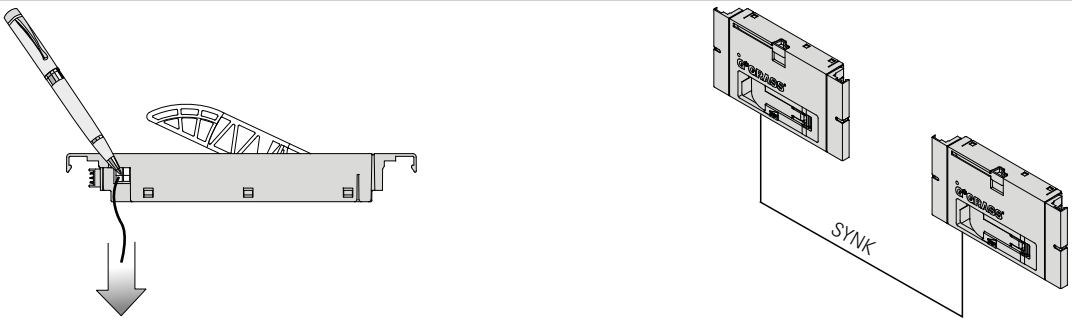

PAGE REFERENCES

Horizontal wooden stretcher	78	Back panel frame set mounting	84	Drawer sides	13
Vertical wooden stretcher	80	Bottom panel frame set mounting	86	Slides	32
Overhead frame set mounting	82	Side panel frame set mounting	88	Assembly technology	120

handlie.com

ADJUSTMENT

Variable drive force

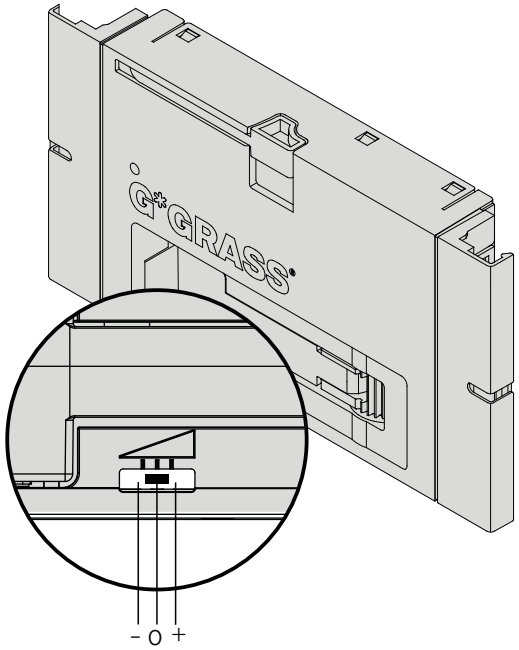

NOTES

- Cabinet must be level
- System must be disconnected for installation and dismantling!
- Provide switched sockets
- From a cabinet width of 1200 mm we recommend the use of two drive units. The synchronisation cable ensures simultaneous activation
- **Caution:**
  Never position any screws near the drive lever on the back panel of the drawer
- Per power supply unit it is possible to operate up to 30 drive units

TECHNICAL DATA

- **Application area**
  only in dry, indoor rooms
- **Power supply unit**
  Power supply: 100 to 240 V
  Mains frequency: 50 to 60 Hz
  Max. power output: 230 W
- **Drive unit**
  Power supply: 24 V
- **Operating conditions**
  Temperature: 0 to 50 °C
  Air humidity: 15 to 90 %
  non-condensing

LEGEND

SYNK	Synchronisation cable

Tavinea 91 is both:
A unique, modular organising system as well as a timeless design object.

Attractive structural elements made of aluminium and wooden flexible inserts divide the storage space of drawers and pull-outs in a particularly appealing and effective way. The velvety-soft non-slip mats roll out perfectly, quietly dampening all loads, are odour-free and washable.

The interior accessory system Tavinea 91 is "Organized by GRASS".

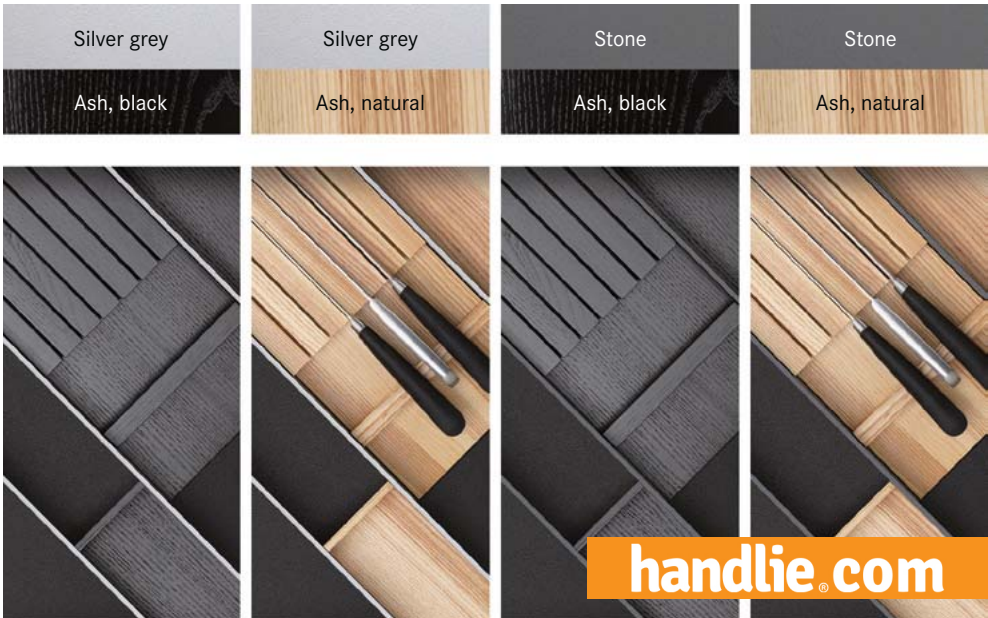

handlie.com

DIVIDING AND ORGANISING SYSTEMS

Organising, dividing, fitting out –
useful aids for organising storage space.

	Product description		Page
	Tavinea 91 • Modular interior accessory system • Individual division with sliding and structural elements • For vertical or diagonal division of drawers and pull-outs	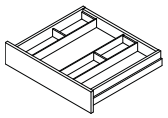	96
	Ino(x)sys for drawers • Perfect organisation for cutlery and small items • Modular extension possible	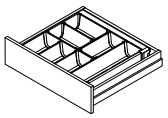	116
	Drawer divider • Elegant storage space organisation by dividing the drawer • Easy to fit	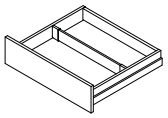	118

TAVINEA 91 FOR DRAWERS

Vertical, height 55 mm, cabinet side wall S16

- Modular system for drawers in offices, kitchens, bathrooms and living areas
- Timeless, puristic design – without grooves, edges or holes
- Individual space organisation
- Arrangement and size of the compartments is variable
- High-quality materials: Aluminium and solid wood
- Unique non-slip mats for firm grip and silent storage

Packaging unit (PU):
201 = 1 item in a cardboard box

Notes:

- Non-slip mats are hygiene tested, non-toxic and easy to clean (washable)
- For the cabinet intermediate widths refer to the installation information (page 112)

ORDER INFORMATION S16

1 Tavinea 91, KB 450

Material	NL 450	PU	NL 500	PU	NL 550	PU
Aluminium Stone / Light ash	F007108044	201	F007101931	201	F007108100	201
Aluminium Stone / Dark ash	F007108058	201	F007101971	201	F007108114	201
Aluminium Silver grey / Light ash	F007108072	201	F007102010	201	F007108128	201
Aluminium Silver grey / Dark ash	F007108086	201	F007102030	201	F007108142	201

Minimum order: 30 units

2 Tavinea 91, KB 600

Material	NL 450	PU	NL 500	PU	NL 550	PU
Aluminium Stone / Light ash	F007108045	201	F007101933	201	F007108101	201
Aluminium Stone / Dark ash	F007108059	201	F007101973	201	F007108115	201
Aluminium Silver grey / Light ash	F007108073	201	F007102011	201	F007108129	201
Aluminium Silver grey / Dark ash	F007108087	201	F007102031	201	F007108143	201

Minimum order: 30 units

3 Tavinea 91, KB 900

Material	NL 450	PU	NL 500	PU	NL 550	PU
Aluminium Stone / Light ash	F007108046	201	F007108512	201	F007108102	201
Aluminium Stone / Dark ash	F007108060	201	F007108516	201	F007108116	201
Aluminium Silver grey / Light ash	F007108074	201	F007108520	201	F007108130	201
Aluminium Silver grey / Dark ash	F007108088	201	F007108524	201	F007108144	201

Minimum order: 15 units

4 Tavinea 91, KB 1200

Material	NL 450	PU	NL 500	PU	NL 550	PU
Aluminium Stone / Light ash	F007108047	201	F007108513	201	F007108103	201
Aluminium Stone / Dark ash	F007108061	201	F007108517	201	F007108117	201
Aluminium Silver grey / Light ash	F007108075	201	F007108521	201	F007108131	201
Aluminium Silver grey / Dark ash	F007108089	201	F007108525	201	F007108145	201

Minimum order: 15 units

PAGE REFERENCES

Drawer sides	13	Steel back panels	56	Installation information	112
Slides	32	Designer panels	58	Assembly technology	120
Inset panels	42	Sensomatic	73	Packaging code	131

handlie.com

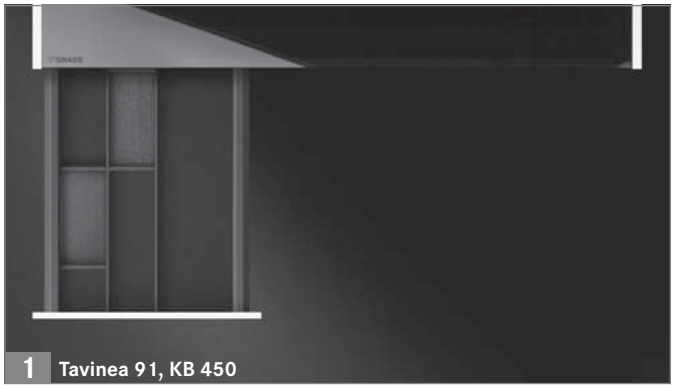

1 Tavinea 91, KB 450

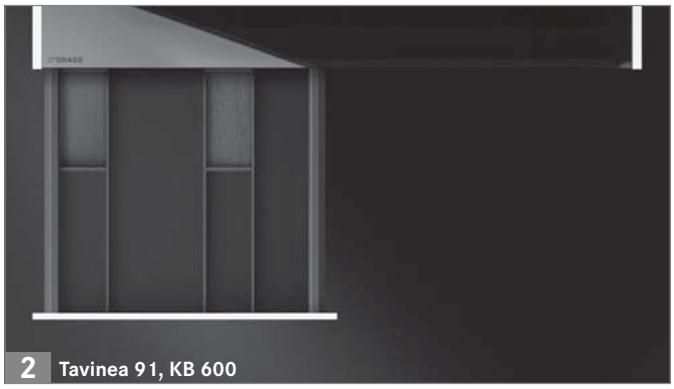

2 Tavinea 91, KB 600

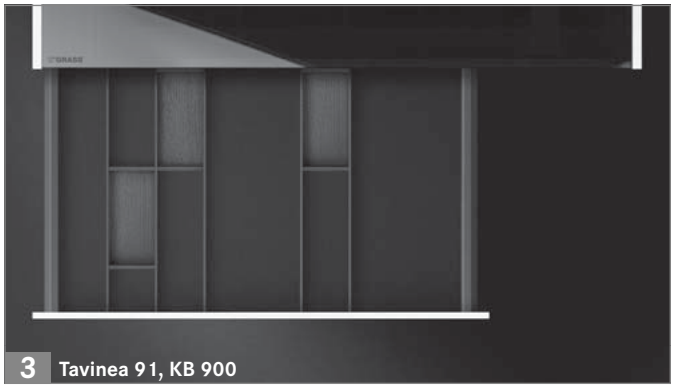

3 Tavinea 91, KB 900

4 Tavinea 91, KB 1200

LEGEND

KB	Cabinet width
NL	Nominal length
S	Cabinet side wall

TAVINEA 91 FOR DRAWERS

Vertical, height 55 mm, cabinet side wall S18/S19

- Modular system for drawers in offices, kitchens, bathrooms and living areas
- Timeless, puristic design – without grooves, edges or holes
- Individual space organisation
- Arrangement and size of the compartments is variable
- High-quality materials: Aluminium and solid wood
- Unique non-slip mats for firm grip and silent storage

Packaging unit (PU):
201 = 1 item in a cardboard box

Notes:

- Non-slip mats are hygiene tested, non-toxic and easy to clean (washable)
- For the cabinet intermediate widths refer to the installation information (page 112)

ORDER INFORMATION S18/S19

1 Tavinea 91, KB 450

Material	NL 450	PU	NL 500	PU	NL 550	PU
Aluminium Stone / Light ash	F007108037	201	F007101911	201	F007108093	201
Aluminium Stone / Dark ash	F007108051	201	F007101951	201	F007108107	201
Aluminium Silver grey / Light ash	F007108065	201	F007102000	201	F007108121	201
Aluminium Silver grey / Dark ash	F007108079	201	F007102020	201	F007108135	201

Minimum order: 30 units

2 Tavinea 91, KB 600

Material	NL 450	PU	NL 500	PU	NL 550	PU
Aluminium Stone / Light ash	F007108038	201	F007101913	201	F007108094	201
Aluminium Stone / Dark ash	F007108052	201	F007101953	201	F007108108	201
Aluminium Silver grey / Light ash	F007108066	201	F007102001	201	F007108122	201
Aluminium Silver grey / Dark ash	F007108080	201	F007102021	201	F007108136	201

Minimum order: 30 units

3 Tavinea 91, KB 900

Material	NL 450	PU	NL 500	PU	NL 550	PU
Aluminium Stone / Light ash	F007108039	201	F007108510	201	F007108095	201
Aluminium Stone / Dark ash	F007108053	201	F007108514	201	F007108109	201
Aluminium Silver grey / Light ash	F007108067	201	F007108518	201	F007108123	201
Aluminium Silver grey / Dark ash	F007108081	201	F007108522	201	F007108137	201

Minimum order: 15 units

4 Tavinea 91, KB 1200

Material	NL 450	PU	NL 500	PU	NL 550	PU
Aluminium Stone / Light ash	F007108040	201	F007108511	201	F007108096	201
Aluminium Stone / Dark ash	F007108054	201	F007108515	201	F007108110	201
Aluminium Silver grey / Light ash	F007108068	201	F007108519	201	F007108124	201
Aluminium Silver grey / Dark ash	F007108082	201	F007108523	201	F007108138	201

Minimum order: 15 units

PAGE REFERENCES

Drawer sides	13	Steel back panels	56	Installation information	112
Slides	32	Designer panels	58	Assembly technology	120
Inset panels	42	Sensomatic	73	Packaging code	131

handlie.com

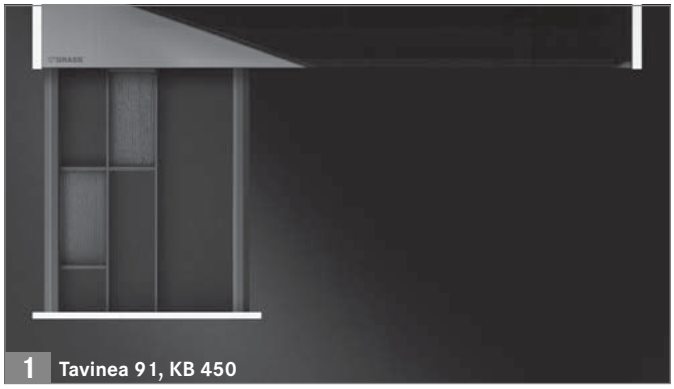

1 Tavinea 91, KB 450

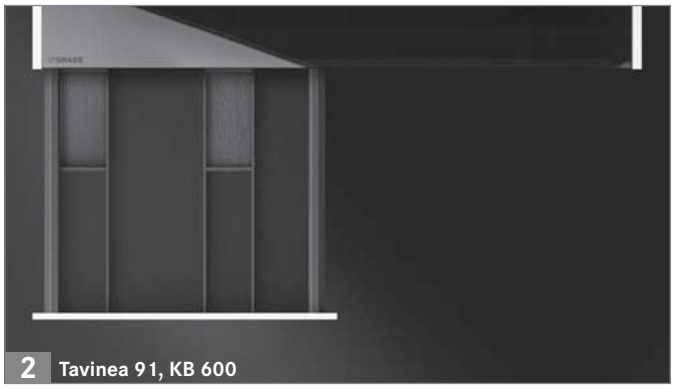

2 Tavinea 91, KB 600

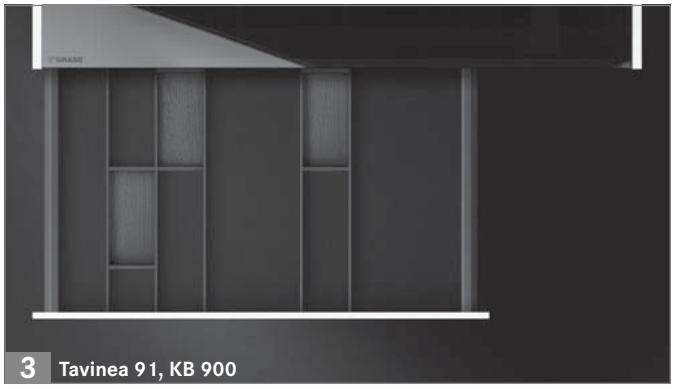

3 Tavinea 91, KB 900

4 Tavinea 91, KB 1200

LEGEND

KB	Cabinet width
NL	Nominal length
S	Cabinet side wall

TAVINEA 91 ACCESSORIES

Vertical, height 55 mm

- The right accessories for all requirements
- Knives, herb and spice containers, rolls of foil, cutlery or eau de toilette – everything is perfectly stored with the Tavinea 91 accessories
- High-quality materials: Aluminium and solid wood
- Coordinated to the respective nominal length
- Colour coordinated

Packaging unit (PU):
201 = 1 item in a cardboard box

Note:
Accessories are hygiene tested and non-toxic

ORDER INFORMATION

1 Knife block, KB 600/900/1200

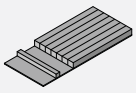
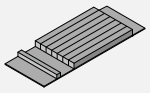

Material	NL 450	PU	NL 500	PU	NL 550[1]	PU
Light ash	**F007**108**657**	201	**F007**101**990**	201	**F007**101**990** **F007**108**659**	201
Dark ash	**F007**108**658**	201	**F007**101**995**	201	**F007**101**995** **F007**108**660**	201

[1] NL 550 comprises a knife block and levelling element. Please order both article numbers.

2 Spice rack, KB 600/900/1200

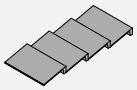
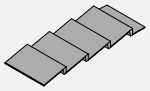

Material	NL 450	PU	NL 500	PU	NL 550[1]	PU
Light ash			**F007**101**992**	201	**F007**101**992** **F007**108**659**	201
Dark ash			**F007**101**997**	201	**F007**101**997** **F007**108**660**	201

[1] NL 550 comprises a spice rack and levelling element. Please order both article numbers.

3 Foil holder, KB 600/900/1200

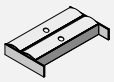
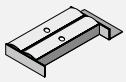

Material	NL 450	PU	NL 500	PU	NL 550[1]	PU
Light ash	**F007**101**994**	201	**F007**101**994**	201	**F007**101**994** **F007**108**659**	201
Dark ash	**F007**101**999**	201	**F007**101**999**	201	**F007**101**999** **F007**108**660**	201

[1] NL 550 comprises a foil holder and levelling element. Please order both article numbers.

4 Double square, KB 600/900/1200

Material	Item No.	PU				
Light ash	**F007**102**423**	201				
Dark ash	**F007**102**429**	201				

PAGE REFERENCES

Drawer sides	13	Steel back panels	56	Assembly technology	120
Slides	32	Designer panels	58	Assembly aids	124
Inset panels	42	Sensomatic	73	Packaging code	131

handlie.com

APPLICATION EXAMPLES

1 Knife block

2 Spice rack

3 Foil holder

4 Double square

LEGEND

KB	Cabinet width
NL	Nominal length

TAVINEA 91 FOR DRAWERS

Vertical, height 110 mm, cabinet side wall S16

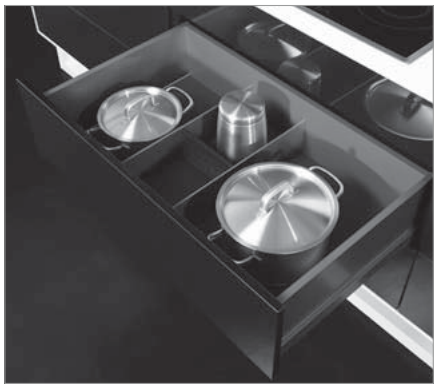

- Modular system for drawers in offices, kitchens, bathrooms and living areas
- Timeless, puristic design – without grooves, edges or holes
- Individual space organisation
- Arrangement and size of the compartments is variable
- High-quality materials: Aluminium and solid wood
- Unique non-slip mats for firm grip and silent storage

Packaging unit (PU):
201 = 1 item in a cardboard box

Notes:

- Non-slip mats are hygiene tested, non-toxic and easy to clean (washable)
- For the cabinet intermediate widths refer to the installation information (page 114)

ORDER INFORMATION S16

1 Tavinea 91, KB 600

Material	NL 450	PU	NL 500	PU		
Aluminium Stone / Light ash	F007108048	201	F007101939	201		
Aluminium Stone / Dark ash	F007108062	201	F007101979	201		
Aluminium Silver grey / Light ash	F007108076	201	F007102014	201		
Aluminium Silver grey / Dark ash	F007108090	201	F007102034	201		

Minimum order: 16 units

2 Tavinea 91, KB 900

Material	NL 450	PU	NL 500	PU		
Aluminium Stone / Light ash	F007108049	201	F007101941	201		
Aluminium Stone / Dark ash	F007108063	201	F007101981	201		
Aluminium Silver grey / Light ash	F007108077	201	F007102015	201		
Aluminium Silver grey / Dark ash	F007108091	201	F007102035	201		

Minimum order: 16 units

3 Tavinea 91, KB 1200

Material	NL 450	PU	NL 500	PU		
Aluminium Stone / Light ash	F007108050	201	F007101943	201		
Aluminium Stone / Dark ash	F007108064	201	F007101983	201		
Aluminium Silver grey / Light ash	F007108078	201	F007102016	201		
Aluminium Silver grey / Dark ash	F007108092	201	F007102036	201		

Minimum order: 16 units

PAGE REFERENCES

Drawer sides	13	Steel back panels	56	Installation information	114
Slides	32	Designer panels	58	Assembly technology	120
Inset panels	42	Sensomatic	73	Packaging code	131

handlie.com

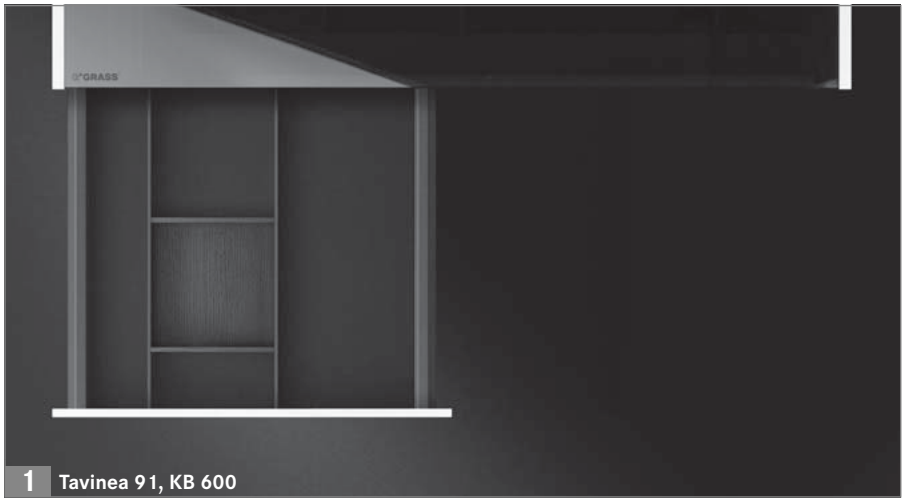

1 Tavinea 91, KB 600

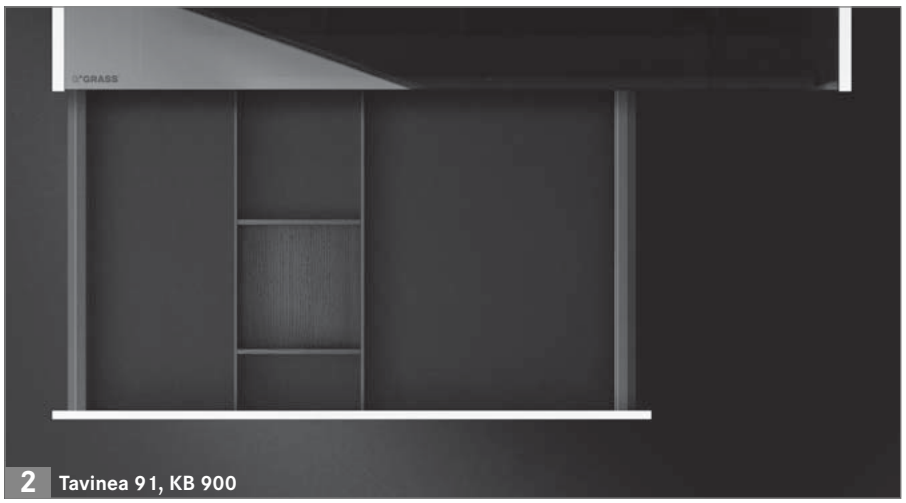

2 Tavinea 91, KB 900

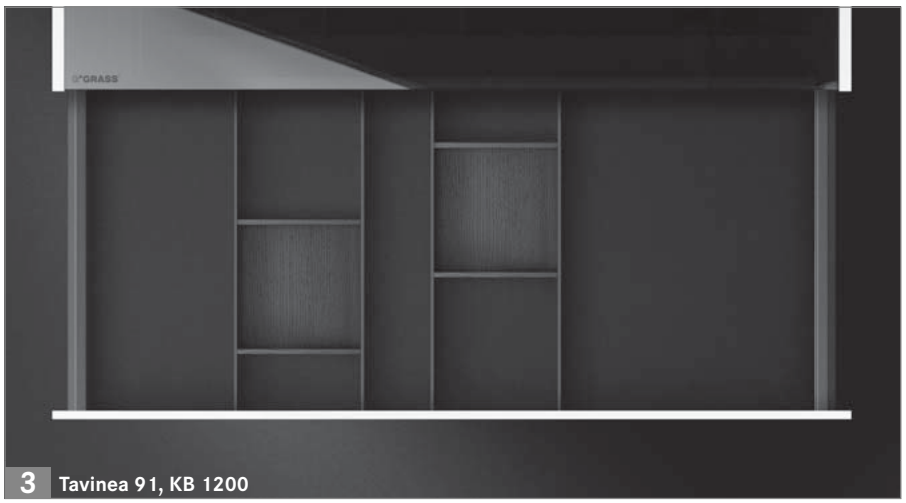

3 Tavinea 91, KB 1200

LEGEND

KB	Cabinet width
NL	Nominal length
S	Cabinet side wall

TAVINEA 91 FOR DRAWERS

Vertical, height 110 mm, cabinet side wall S18/S19

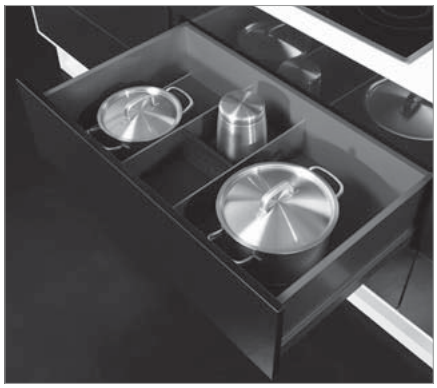

- Modular system for drawers in offices, kitchens, bathrooms and living areas
- Timeless, puristic design – without grooves, edges or holes
- Individual space organisation
- Arrangement and size of the compartments is variable
- High-quality materials: Aluminium and solid wood
- Unique non-slip mats for firm grip and silent storage

Packaging unit (PU):
201 = 1 item in a cardboard box

Notes:

- Non-slip mats are hygiene tested, non-toxic and easy to clean (washable)
- For the cabinet intermediate widths refer to the installation information (page 114)

ORDER INFORMATION S18/S19

1 Tavinea 91, KB 600

Material	NL 450	PU	NL 500	PU		
Aluminium Stone / Light ash	F007108041	201	F007101919	201		
Aluminium Stone / Dark ash	F007108055	201	F007101959	201		
Aluminium Silver grey / Light ash	F007108069	201	F007102004	201		
Aluminium Silver grey / Dark ash	F007108083	201	F007102024	201		

Minimum order: 16 units

2 Tavinea 91, KB 900

Material	NL 450	PU	NL 500	PU		
Aluminium Stone / Light ash	F007108042	201	F007101921	201		
Aluminium Stone / Dark ash	F007108056	201	F007101961	201		
Aluminium Silver grey / Light ash	F007108070	201	F007102005	201		
Aluminium Silver grey / Dark ash	F007108084	201	F007102025	201		

Minimum order: 16 units

3 Tavinea 91, KB 1200

Material	NL 450	PU	NL 500	PU		
Aluminium Stone / Light ash	F007108043	201	F007101923	201		
Aluminium Stone / Dark ash	F007108057	201	F007101963	201		
Aluminium Silver grey / Light ash	F007108071	201	F007102006	201		
Aluminium Silver grey / Dark ash	F007108085	201	F007102026	201		

Minimum order: 16 units

PAGE REFERENCES

Drawer sides	13	Steel back panels	56	Installation information	114
Slides	32	Designer panels	58	Assembly technology	120
Inset panels	42	Sensomatic	73	Packaging code	131

handlie.com

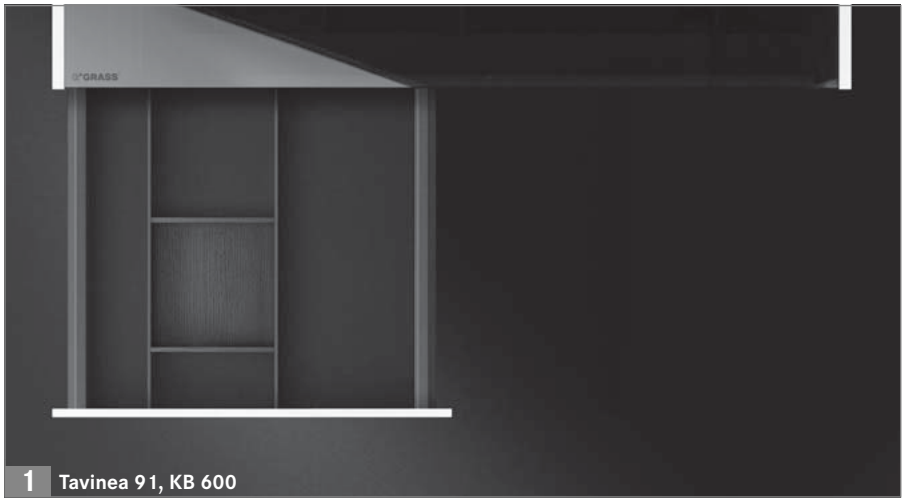

1 Tavinea 91, KB 600

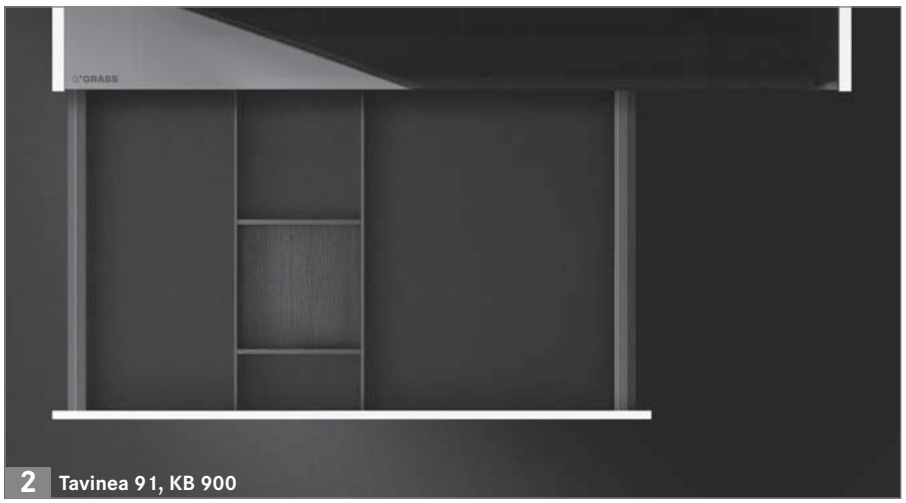

2 Tavinea 91, KB 900

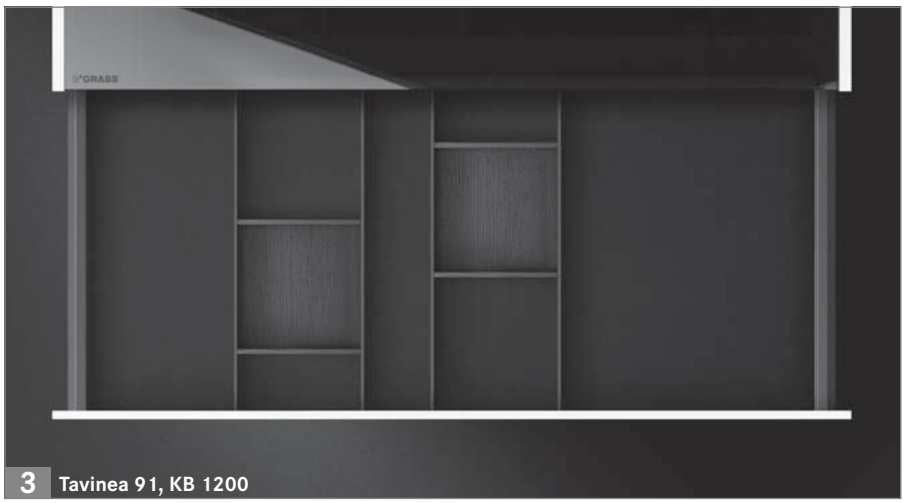

3 Tavinea 91, KB 1200

LEGEND

KB	Cabinet width
NL	Nominal length
S	Cabinet side wall

TAVINEA 91 FOR DRAWERS

Diagonal, height 55 mm, cabinet side wall S16

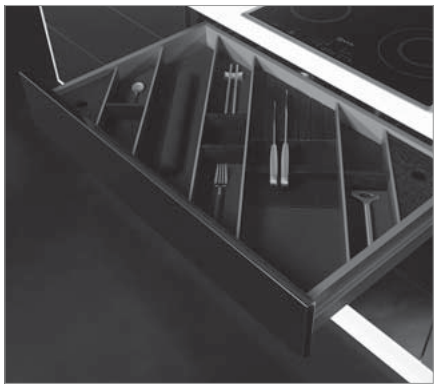

- Modular system for drawers in offices, kitchens, bathrooms and living areas
- Timeless, puristic design – without grooves, edges or holes
- Ergonomically ideal space organisation
- High-quality materials: Aluminium and solid wood
- Unique non-slip mats for firm grip and silent storage

Packaging unit (PU):
201 = 1 item in a cardboard box

Note:
Non-slip mats are hygiene tested, non-toxic and easy to clean (washable)

ORDER INFORMATION S16

1 Tavinea 91, KB 600

Material			NL 500	PU		
Aluminium Stone / Light ash			**F007**101**945**	201		
Aluminium Stone / Dark ash			**F007**101**985**	201		
Aluminium Silver grey / Light ash			**F007**102**017**	201		
Aluminium Silver grey / Dark ash			**F007**102**037**	201		

Minimum order: 30 units

2 Tavinea 91, KB 900

Material			NL 500	PU		
Aluminium Stone / Light ash			**F007**101**947**	201		
Aluminium Stone / Dark ash			**F007**101**987**	201		
Aluminium Silver grey / Light ash			**F007**102**018**	201		
Aluminium Silver grey / Dark ash			**F007**102**038**	201		

Minimum order: 15 units

3 Tavinea 91, KB 1200

Material			NL 500	PU		
Aluminium Stone / Light ash			**F007**101**949**	201		
Aluminium Stone / Dark ash			**F007**101**989**	201		
Aluminium Silver grey / Light ash			**F007**102**019**	201		
Aluminium Silver grey / Dark ash			**F007**102**039**	201		

Minimum order: 15 units

PAGE REFERENCES

Drawer sides	13	Steel back panels	56	Assembly technology	120
Slides	32	Designer panels	58	Assembly aids	124
Inset panels	42	Sensomatic	73	Packaging code	131

handlie.com

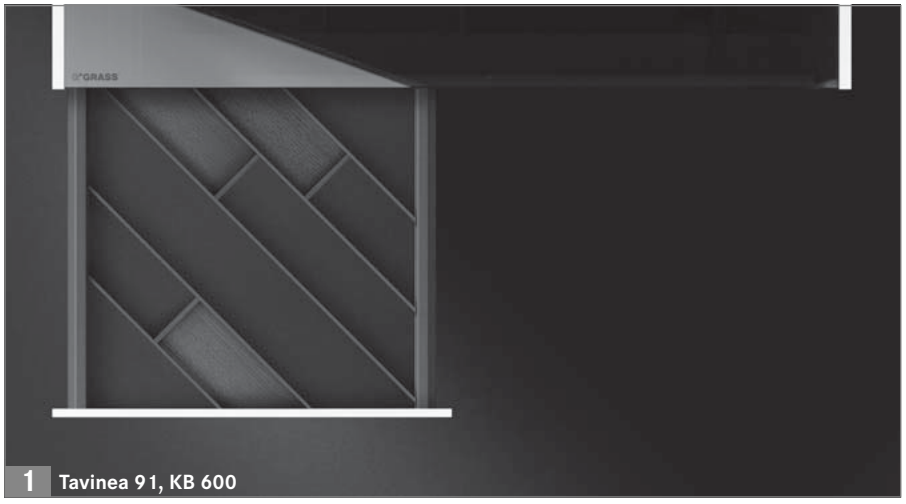

1 Tavinea 91, KB 600

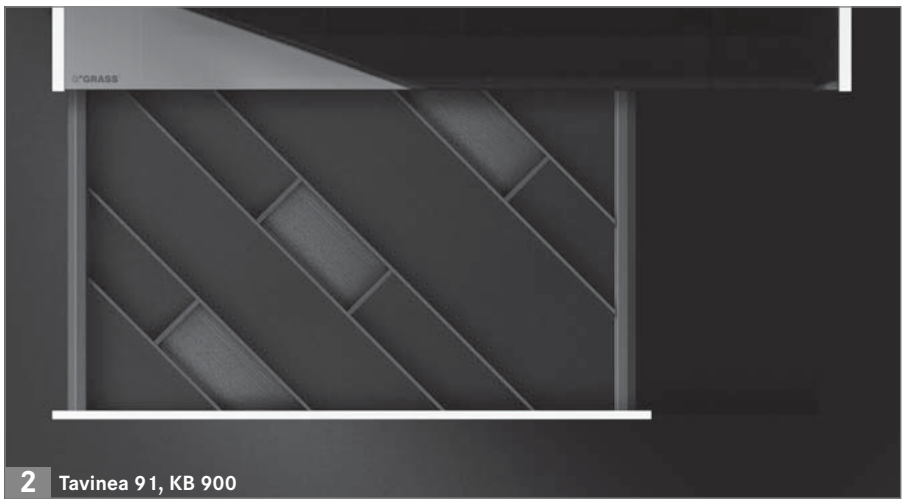

2 Tavinea 91, KB 900

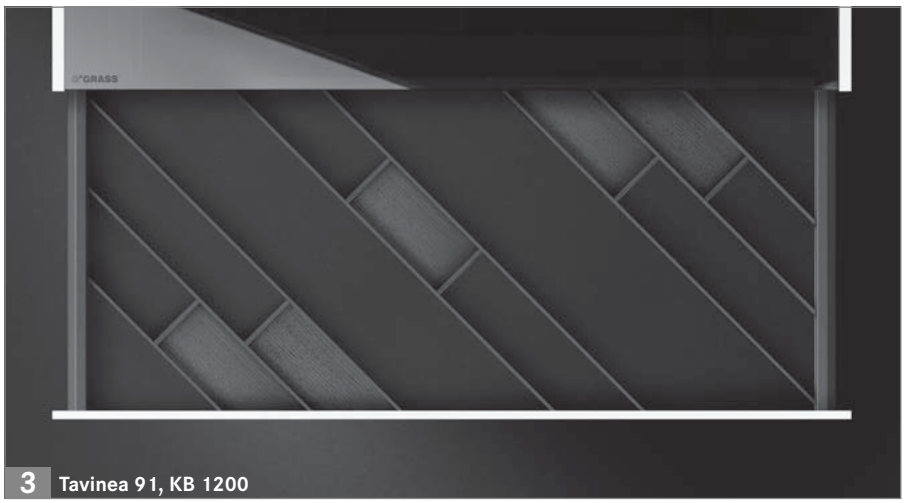

3 Tavinea 91, KB 1200

LEGEND

KB	Cabinet width
NL	Nominal length
S	Cabinet side wall

TAVINEA 91 FOR DRAWERS

Diagonal, height 55 mm, cabinet side wall S18/S19

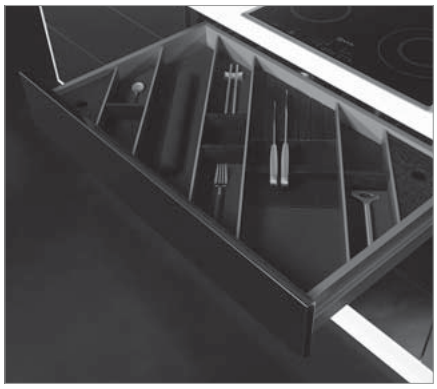

- Modular system for drawers in offices, kitchens, bathrooms and living areas
- Timeless, puristic design – without grooves, edges or holes
- Ergonomically ideal space organisation
- High-quality materials: Aluminium and solid wood
- Unique non-slip mats for firm grip and silent storage

Packaging unit (PU):
201 = 1 item in a cardboard box

Note:
Non-slip mats are hygiene tested, non-toxic and easy to clean (washable)

ORDER INFORMATION S18/S19

1 Tavinea 91, KB 600

Material			NL 500	PU		
Aluminium Stone / Light ash			**F007**101**925**	201		
Aluminium Stone / Dark ash			**F007**101**965**	201		
Aluminium Silver grey / Light ash			**F007**102**007**	201		
Aluminium Silver grey / Dark ash			**F007**102**027**	201		

Minimum order: 30 units

2 Tavinea 91, KB 900

Material			NL 500	PU		
Aluminium Stone / Light ash			**F007**101**927**	201		
Aluminium Stone / Dark ash			**F007**101**967**	201		
Aluminium Silver grey / Light ash			**F007**102**008**	201		
Aluminium Silver grey / Dark ash			**F007**102**028**	201		

Minimum order: 15 units

3 Tavinea 91, KB 1200

Material			NL 500	PU		
Aluminium Stone / Light ash			**F007**101**929**	201		
Aluminium Stone / Dark ash			**F007**101**969**	201		
Aluminium Silver grey / Light ash			**F007**102**009**	201		
Aluminium Silver grey / Dark ash			**F007**102**029**	201		

Minimum order: 15 units

PAGE REFERENCES

Drawer sides	13	Steel back panels	56	Assembly technology	120
Slides	32	Designer panels	58	Assembly aids	124
Inset panels	42	Sensomatic	73	Packaging code	131

handlie.com

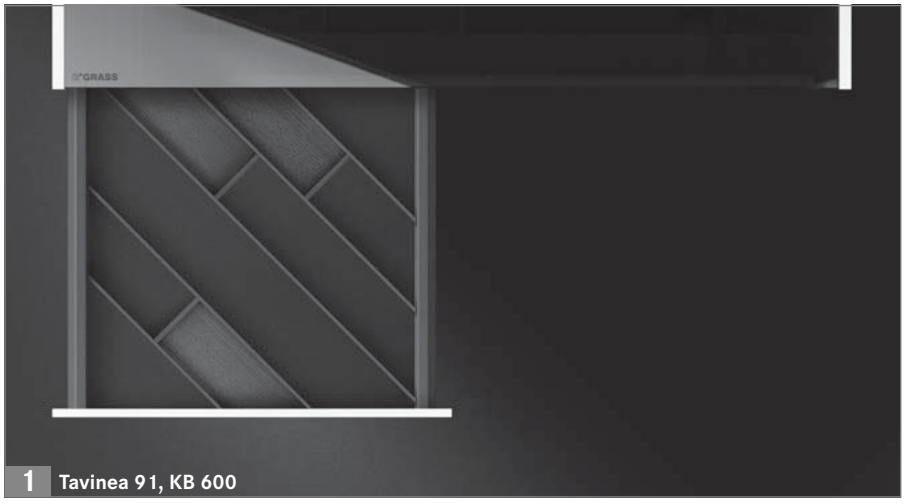

1 Tavinea 91, KB 600

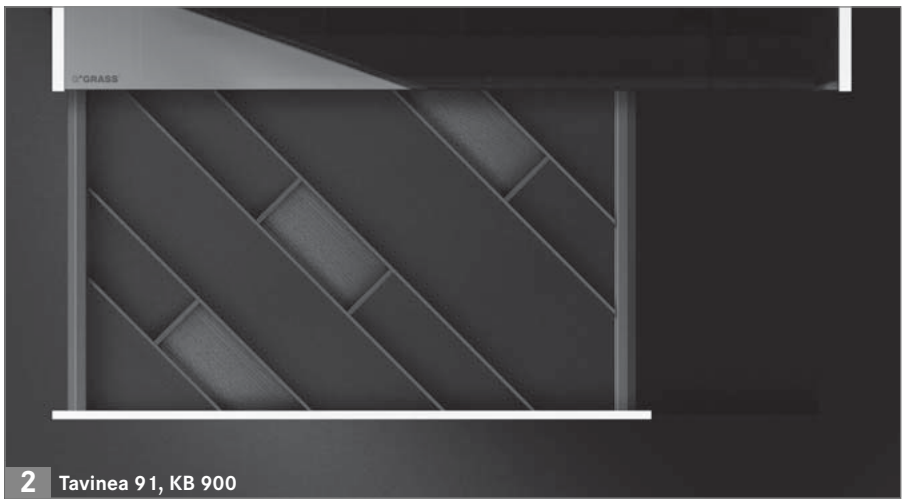

2 Tavinea 91, KB 900

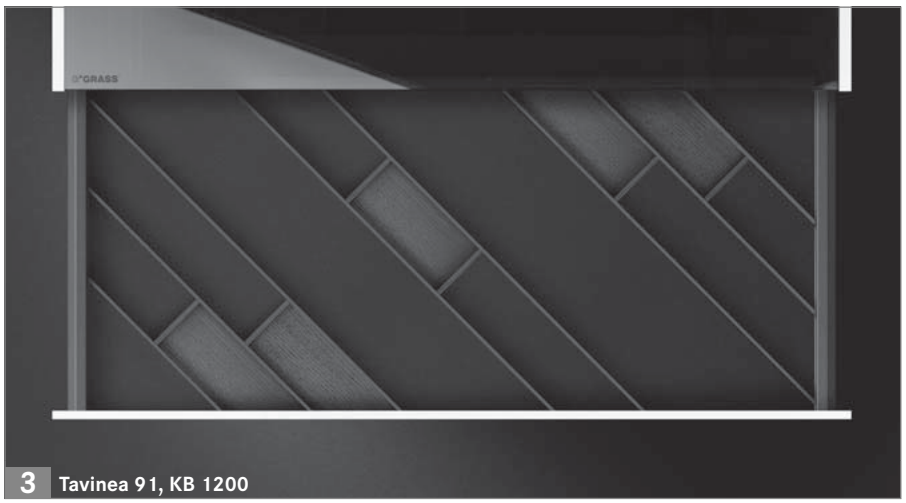

3 Tavinea 91, KB 1200

LEGEND

KB	Cabinet width
NL	Nominal length
S	Cabinet side wall

TAVINEA 91 ACCESSORIES

Diagonal, height 55 mm

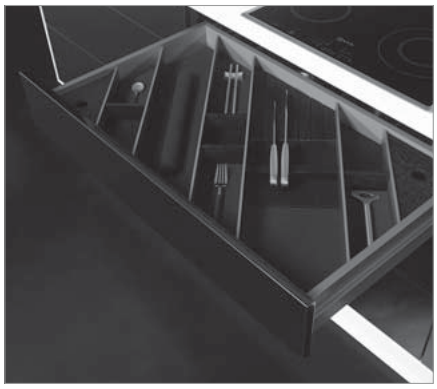

- The right accessories for all requirements
- Knives, herb and spice containers, rolls of foil, cutlery or eau de toilette – everything is perfectly stored with the Tavinea 91 accessories
- High-quality materials: Aluminium and solid wood
- Coordinated to the respective nominal length
- Colour coordinated

Packaging unit (PU):
201 = 1 item in a cardboard box

Note:
Accessories are hygiene tested and non-toxic

ORDER INFORMATION

1 Knife block, KB 900/1200

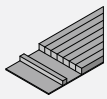

Material	NL 500	PU
Light ash	**F007102419**	201
Dark ash	**F007102425**	201

2 Spice rack, KB 900/1200

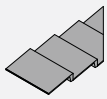

Material	NL 500	PU
Light ash	**F007102421**	201
Dark ash	**F007102427**	201

3 Foil holder, KB 900/1200

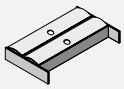

Material	NL 500	PU
Light ash	**F007101994**	201
Dark ash	**F007101999**	201

4 Double square, KB 900/1200

Material	Item No.	PU
Light ash	**F007102423**	201
Dark ash	**F007102429**	201

PAGE REFERENCES

Drawer sides	13	Steel back panels	56	Assembly technology	120
Slides	32	Designer panels	58	Assembly aids	124
Inset panels	42	Sensomatic	73	Packaging code	131

handlie.com

APPLICATION EXAMPLES

1 Knife block

2 Spice rack

3 Foil holder

4 Double square

LEGEND

KB	Cabinet width
NL	Nominal length

TAVINEA 91 INSTALLATION INFORMATION

Vertical, height 55 mm

TAVINEA 91, CABINET WIDTH 450 – CAN BE CUT TO LENGTH UP TO KB 300

Mat cutting dimensions

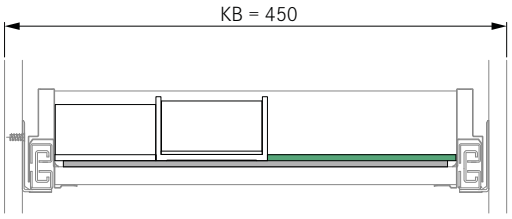

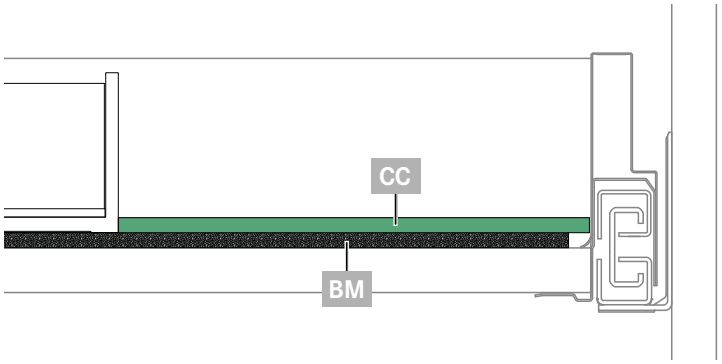

Cabinet width (KB)	Mat cutting dimensions
450 mm	–
400 mm	- 50 mm
350 mm	- 100 mm
300 mm	- 150 mm

Note:

The width and depth of the Tavinea 91 KB-450 set are exactly coordinated with the NOVA PRO SCALA drawers with a cabinet width (KB) of 450 mm. For different cabinet widths – from 300 to 449 mm – the width of one of the non-slip carpets, the so-called customised carpet (CC), and the base mat (BM) must be shortened or cut to size (refer to the table on the left).

TAVINEA 91, CABINET WIDTH 600 – CAN BE CUT TO LENGTH UP TO KB 500

Mat cutting dimensions

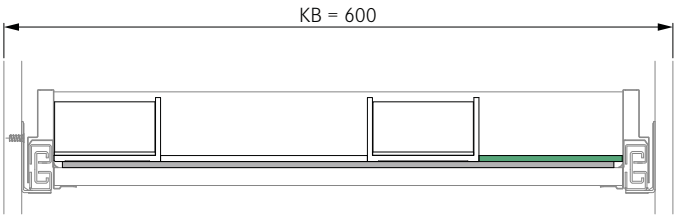

Cabinet width (KB)	Mat cutting dimensions
600 mm	–
550 mm	- 50 mm
500 mm	- 100 mm

Note:

The width and depth of the Tavinea 91 KB-600 set are exactly coordinated with the NOVA PRO SCALA drawers with a cabinet width (KB) of 600 mm. For different cabinet widths – from 500 to 599 mm – the width of one of the non-slip carpets, the so-called customised carpet (CC), and the base mat (BM) must be shortened or cut to size (refer to the table on the left).

PAGE REFERENCES

Drawer sides	13	Steel back panels	56	Assembly technology	120
Slides	32	Designer panels	58	Assembly aids	124
Inset panels	42	Sensomatic	73	Packaging code	131

handlie.com

TAVINEA 91, CABINET WIDTH 900 – CAN BE CUT TO LENGTH UP TO KB 650

Mat cutting dimensions

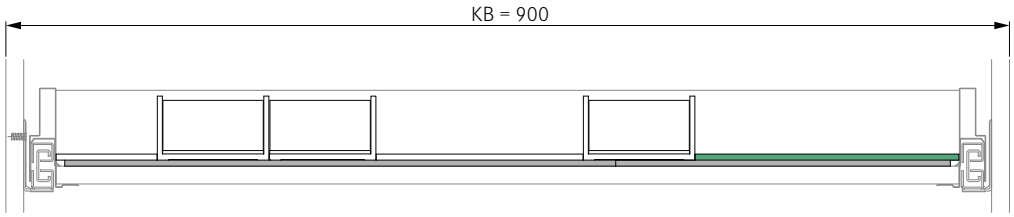

Cabinet width (KB)	Mat cutting dimensions
900 mm	–
850 mm	- 50 mm
800 mm	- 100 mm
750 mm	- 150 mm
700 mm	- 200 mm
650 mm	- 250 mm

Note:

The width and depth of the Tavinea 91 KB-900 set are exactly coordinated with the NOVA PRO SCALA drawers with a cabinet width (KB) of 900 mm. For different cabinet widths – from 650 to 899 mm – the width of one of the non-slip carpets, the so-called customised carpet (CC), and the base mat (BM) must be shortened or cut to size (refer to the table on the left).

TAVINEA 91, CABINET WIDTH 1200 – CAN BE CUT TO LENGTH UP TO KB 950

Mat cutting dimensions

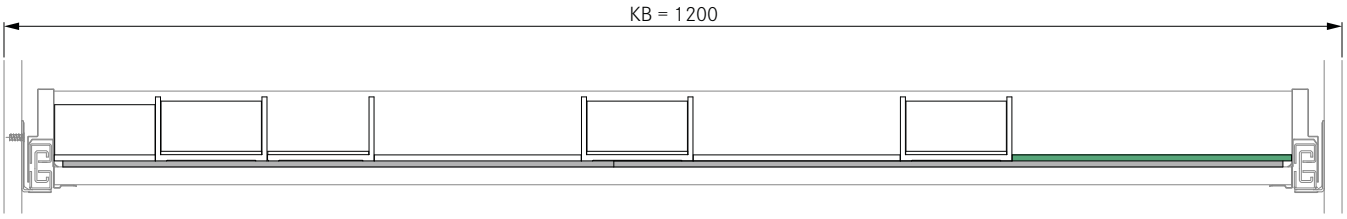

Cabinet width (KB)	Mat cutting dimensions
1200 mm	–
1150 mm	- 50 mm
1100 mm	- 100 mm
1050 mm	- 150 mm
1000 mm	- 200 mm
950 mm	- 250 mm

Note:

The width and depth of the Tavinea 91 KB-1200 set are exactly coordinated with the NOVA PRO SCALA drawers with a cabinet width (KB) of 1200 mm. For different cabinet widths – from 950 to 1199 mm – the width of one of the non-slip carpets, the so-called customised carpet (CC), and the base mat (BM) must be shortened or cut to size (refer to the table on the left).

LEGEND

BM	Base mat
CC	Customised carpet
KB	Cabinet width

TAVINEA 91 INSTALLATION INFORMATION

Vertical, height 110 mm

TAVINEA 91, CABINET WIDTH 600 – CAN BE CUT TO LENGTH UP TO KB 300

Mat cutting dimensions

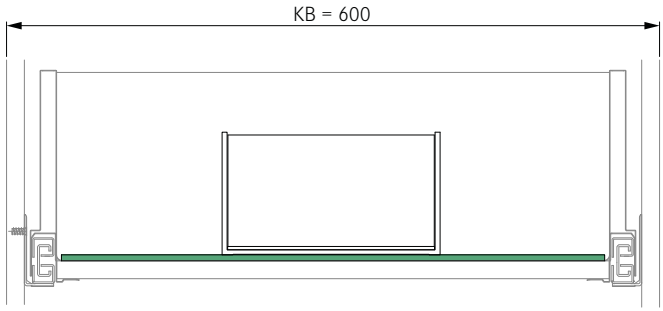

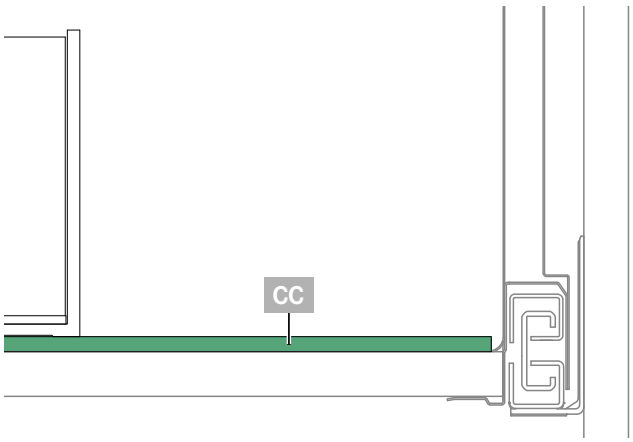

Cabinet width (KB)	Mat cutting dimensions
600 mm	–
550 mm	- 50 mm
500 mm	- 100 mm
450 mm	- 150 mm
400 mm	- 200 mm
350 mm	- 250 mm
300 mm	- 300 mm

Note:

The width and depth of the Tavinea 91 KB-600 set are exactly coordinated with the NOVA PRO SCALA drawers with a cabinet width (KB) of 600 mm. For different cabinet widths – from 300 to 599 mm – the width of the so-called customised carpet (CC) must be reduced or cut to size (refer to the table on the left).

TAVINEA 91, CABINET WIDTH 900 – CAN BE CUT TO LENGTH UP TO KB 650

Mat cutting dimensions

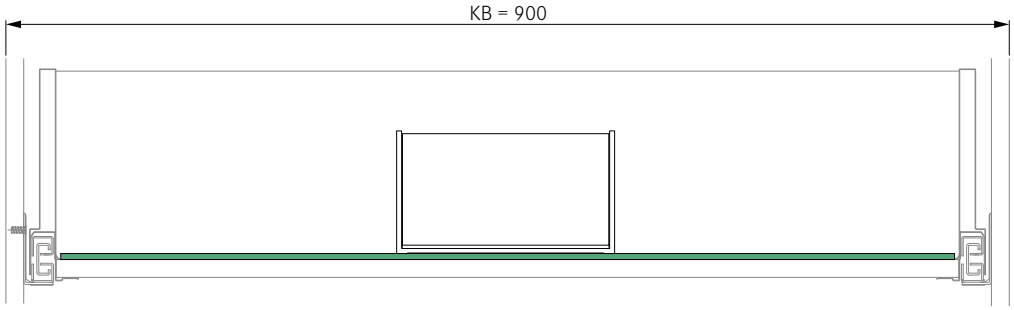

Cabinet width (KB)	Mat cutting dimensions
900 mm	–
850 mm	- 50 mm
800 mm	- 100 mm
750 mm	- 150 mm
700 mm	- 200 mm
650 mm	- 250 mm

Note:

The width and depth of the Tavinea 91 KB-900 set are exactly coordinated with the NOVA PRO SCALA drawers with a cabinet width (KB) of 900 mm. For different cabinet widths – from 650 to 899 mm – the width of the so-called customised carpet (CC) must be reduced or cut to size (refer to the table on the left).

PAGE REFERENCES

Drawer sides	13	Steel back panels	56	Assembly technology	120
Slides	32	Designer panels	58	Assembly aids	124
Inset panels	42	Sensomatic	73	Packaging code	131

TAVINEA 91, CABINET WIDTH 1200 – CAN BE CUT TO LENGTH UP TO KB 950

Mat cutting dimensions

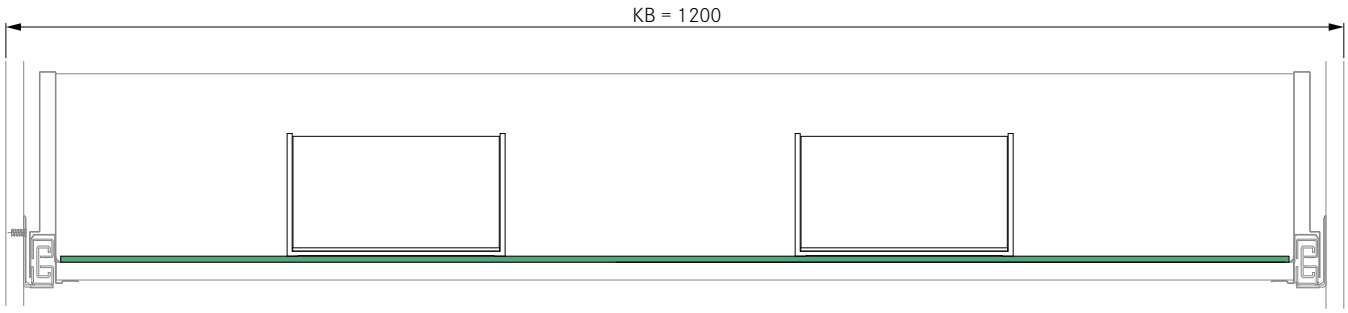

Cabinet width (KB)	Mat cutting dimensions
1200 mm	–
1150 mm	- 50 mm
1100 mm	- 100 mm
1050 mm	- 150 mm
1000 mm	- 200 mm
950 mm	- 250 mm

Note:

The width and depth of the Tavinea 91 KB-1200 set are exactly coordinated with the NOVA PRO SCALA drawers with a cabinet width (KB) of 1200 mm. For different cabinet widths – from 950 to 1199 mm – the width of the so-called customised carpet (CC) must be reduced or cut to size (refer to the table on the left).

LEGEND

CC	Customised carpet
KB	Cabinet width

INO(X)SYS FOR DRAWERS

Organising system

- Perfect organisation for cutlery and small items
- High-quality stainless steel trays
- Modular extension possible
- LGA certified
- Colour coordinated plastic parts

Packaging unit (PU):
201 = 1 item in a cardboard box

Note:
Hygiene tested, non-toxic and dishwasher safe

ORDER INFORMATION

1 **Ino(x)sys 450/B4 from cabinet width 500**
Set

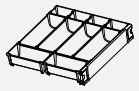

NL	Stone		Ice		Silver	
	Item No.	PU	Item No.	PU	Item No.	PU
450	**F102**108**489**	201	**F102**108**492**	201	**F102**066**515**	201

2 **Ino(x)sys 500/B4 from cabinet width 500**
Set

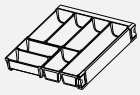

NL	Stone		Ice		Silver	
	Item No.	PU	Item No.	PU	Item No.	PU
500	**F102**108**490**	201	**F102**108**493**	201	**F102**066**517**	201

3 **Ino(x)sys 550/B4 from cabinet width 500**
Set

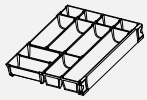

NL	Stone		Ice		Silver	
	Item No.	PU	Item No.	PU	Item No.	PU
550	**F102**108**491**	201	**F102**108**494**	201	**F102**066**519**	201

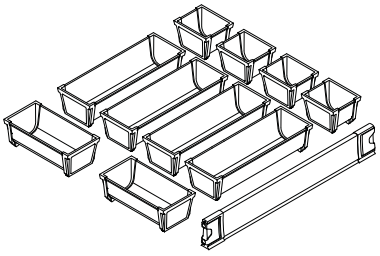

Ino(x)sys 450

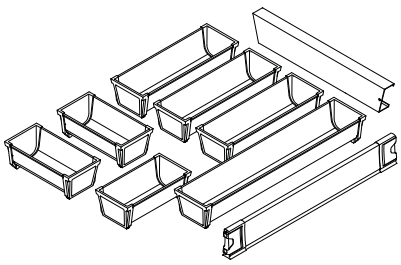

Ino(x)sys 500

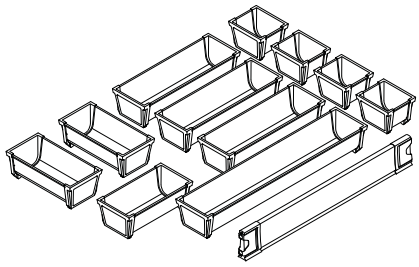

Ino(x)sys 550

PAGE REFERENCES

Drawer sides	13	Steel back panels	56	Assembly technology	120
Slides	32	Designer panels	58	Assembly aids	124
Inset panels	42	Sensomatic	73	Packaging code	131

handlie.com

PLANNING DIMENSIONS

All dimensions in millimetres

Ino(x)sys B4 from external cabinet width (KB) 500 mm	Ino(x)sys stainless steel trays
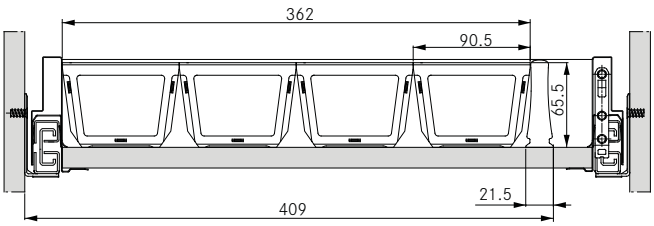	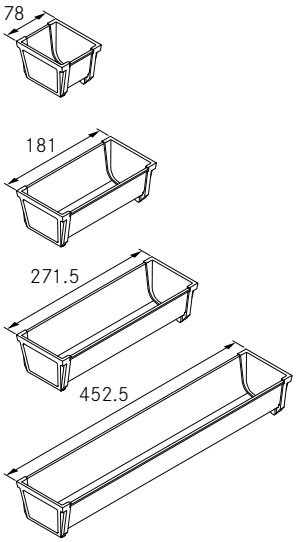

NOTE

LEGEND

NL	Nominal length

DRAWER DIVIDER
Dividing system

- Elegant storage space organisation by dividing the drawer
- Compensation of the cabinet side thickness with flexible clamping elements
- Aluminium profiles for cutting to length
- Easy to fit
- Tool-free adjustment
- Can be retrofitted at any time
- Colour coordinated

Packaging unit (PU):
207 = 10 items in a cardboard box
211 = 20 items in a cardboard box

ORDER INFORMATION

1 **Drawer divider aluminium profile, L = 1185 mm**
Single item: For cutting to length

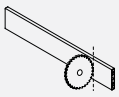

L	Stone		Ice		Silver	
	Item No.	PU	Item No.	PU	Item No.	PU
1185	**F102**102**943**	207	**F102**102**944**	207	**F102**102**945**	207

2 **Clamping unit**
Single item: Can be used on left/right

	Stone		Ice		Silver	
	Item No.	PU	Item No.	PU	Item No.	PU
	F102102**932**	211	**F102**102**947**	211	**F102**102**948**	211

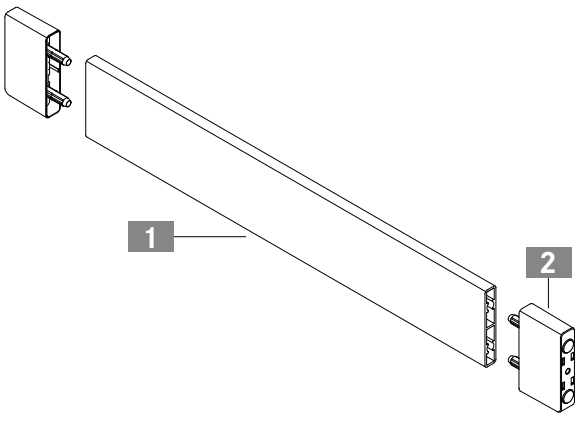

PAGE REFERENCES

Drawer sides	13	Steel back panels	56	Assembly technology	120
Slides	32	Designer panels	58	Assembly aids	124
Inset panels	42	Sensomatic	73	Packaging code	131

handlie.com

PLANNING DIMENSIONS

All dimensions in millimetres

Aluminium profile

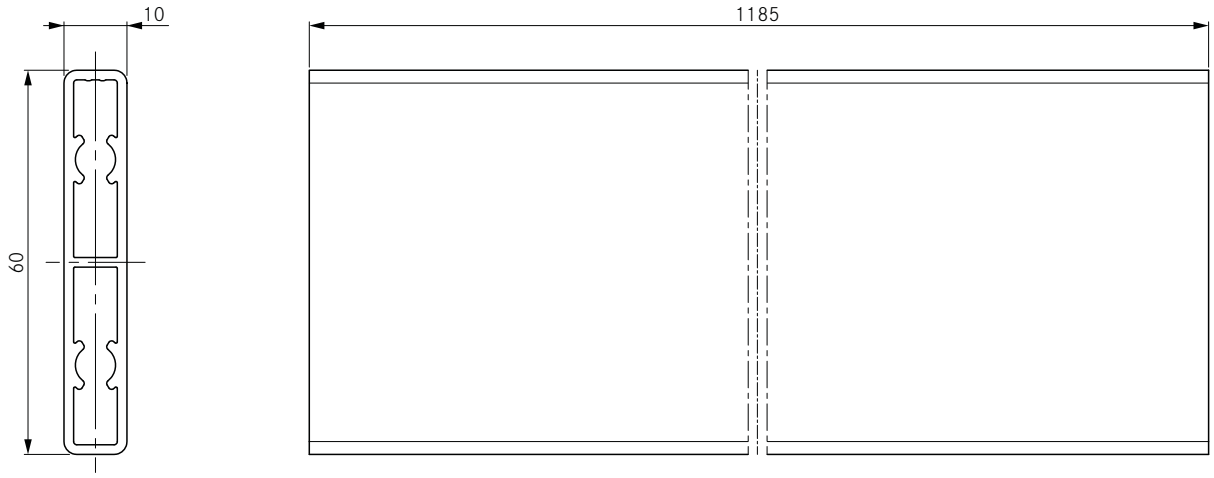

Aluminium profile cutting dimensions

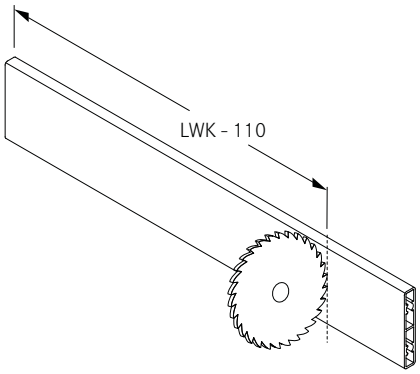

LEGEND

L	Length
LWK	Inside cabinet width

TECMATOR ZP-4N

Industrial production of Nova Pro drawers and pot drawers

- Suitable for press fitting Nova Pro drawers with wooden or steel back panels
- Easy and straightforward handling of the individual parts on the machine
- Sturdy frame construction
- For large series production
- Any required drawer width can be set
- Adjustment with pneumatic clamping
- Fast operating sequences

Standard equipment:

- Insertion cylinder for all slide lengths
- 7 reset stops (50 mm spacing)
- 4 stop for back panel height (can be used on left/right)

Note:

- The standard equipment does not include any press-in brackets. Available as accessories!

ORDER INFORMATION

Designation	B	Reset stops	Item No.	PU
Tecmator ZP-4N, type 1.2 m	max. 1.20 m	7	**F146**102**461**	201*

* upon request

NOVA PRO SCALA H63/H90/H122/H186

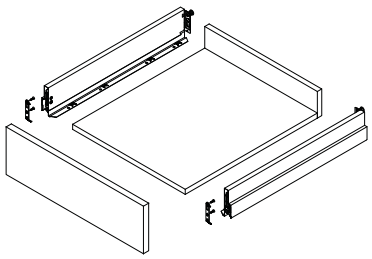

NOVA PRO SCALA CRYSTAL

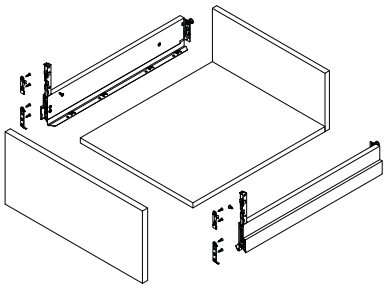

NOVA PRO SCALA CRYSTAL PLUS

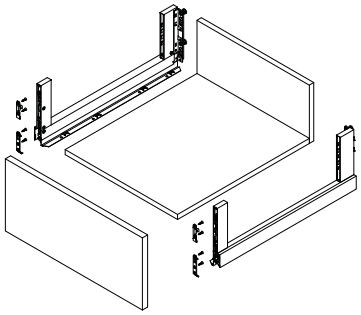

ADVANTAGES

Easy width adjustment thanks to pneumatic clamping

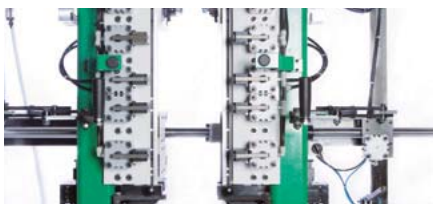

The individual components of the machine can be easily handled

The frame structure ensures excellent stability

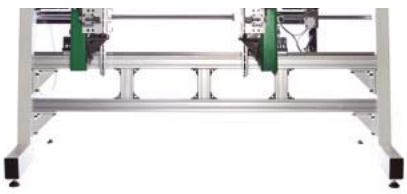

PAGE REFERENCES

Drawer sides	13	Steel back panels	56	Sensomatic	73
Slides	32	Designer panels	58	Organising systems	95
Inset panels	42	Accessories	60	Assembly aids	124

handlie.com

TECHNICAL DATA

Connections	
Pneumatic	6 bar dry

Dimensions	
Width	2.27 m
Depth	1.00 m
Height	1.95 m

Weight	
ZP-4N	420 kg

ACCESSORIES FOR WOODEN BACK PANELS

	Designation	Item No.	PU
	Press-in bracket set for Nova Pro Scala drawer sides H63, H90, H122, H186, Crystal and Crystal Plus	**F146**102**463**	201
	Stop for back panel height, 10 mm Single item: can be used on left/right	**F146**088**918**	299

ACCESSORIES FOR STEEL BACK PANELS

	Designation	Item No.	PU
	Press-in bracket set for Nova Pro Scala drawer sides H63 and H122 incl. holding devices	**F146**102**464**	201
	Press-in bracket set for Nova Pro Scala drawer sides H90, H186 and Crystal Plus incl. holding devices	**F146**102**465**	201
	Press-in bracket set for Nova Pro Scala drawer sides H90 and Crystal incl. holding devices	**F146**102**466**	201
	Pneumatic support for press fitting steel back panels	**F146**102**467**	201

ACCESSORIES FOR WOODEN AND STEEL BACK PANELS

	Designation	Item No.	PU
	Reset stop for drawer, spacing 50 One reset stop required for each drawer width	**F146**092**604**	299
	Reset stop for inset drawers, intervals 25 One reset stop required for each drawer width	**F146**095**520**	299
	Holding device for Nova Pro Scala drawer sides H63, H90, H122, H186, Crystal and Crystal Plus	**F146**102**470**	201

LEGEND

B	Width

TECMATOR ZMV-TP4

Semi-automatic assembly of regular and pot drawers

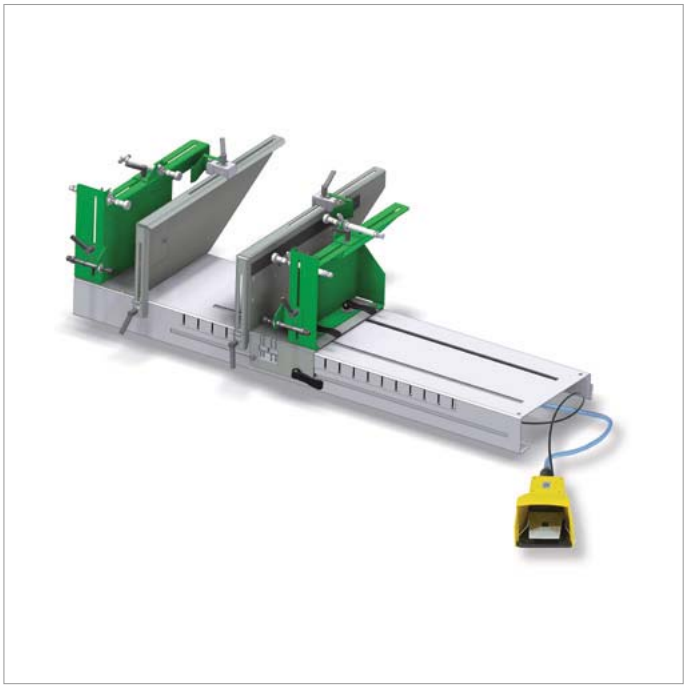

- Pneumatic table unit (up to a drawer width of 250 mm)
- Drawers with an external cabinet width of up to 1200 mm can be processed with the ZMV-TP4
- Easy and straightforward handling
- Sturdy construction
- For small series production
- Pneumatic control system
- High performance

ORDER INFORMATION

Designation	Item No.	PU
Tecmator ZMV-TP4	**F146**108**668**	201

DWD XP

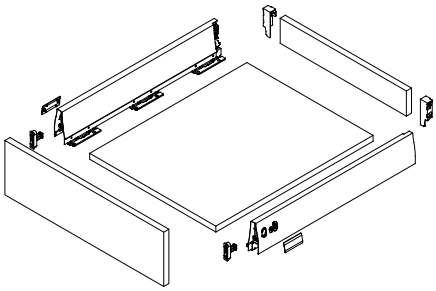

NOVA PRO

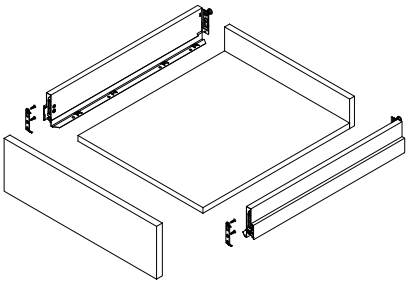

VIONARO

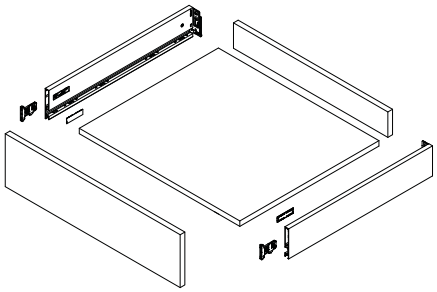

ADVANTAGES

Tool-free setting

Sturdy base frame with pneumatic closing mechanism

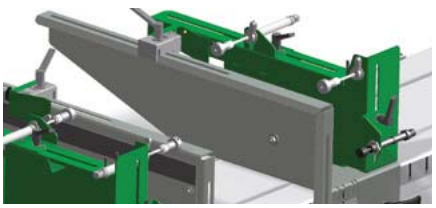

All GRASS drawer systems can be processed

PAGE REFERENCES

Drawer sides	13	Steel back panels	56	Sensomatic	73
Slides	32	Designer panels	58	Organising systems	95
Inset panels	42	Accessories	60	Assembly aids	124

handlie.com

TECHNICAL DATA

Connections	
Pneumatic	6 bar

Dimensions	
Width	1.62 m
Depth	0.90 m
Height	0.50 m

Weight	
ZMV-TP4	65 kg

LEGEND

DRILLING JIG FOR CABINET MEMBER

One set includes:
- Guide rule (1x)
- Marking elements (4x)
- Stop plates B + C (1 each)

A. Reading edge = centre of hole
B. Stop plate for loose cabinet parts
C. Stop plate for assembled cabinet
O. Zero scale position

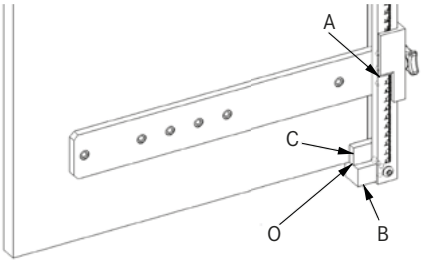

	Item No.	PU
Drilling jig	**F146**094**730**	501

INDIVIDUAL MARKING ELEMENT

For extending the drilling jig
for cabinet member F146094730.

	Item No.	PU
Marking element	**F146**094**721**	299

DRILLING JIG FOR CABINET MEMBER

For use with pilot drill bit F146035692.

	Item No.	PU
Drilling jig	**F146**101**346**	507

WOOD DRILL BIT Ø 5 MM WITH STOP RING

Use for pre-drilling holes for Euro screws.

- Ø 5 mm
- Length 75 mm
- with stop ring

	Item No.	PU
Wood drill	**F146**092**594**	501

PAGE REFERENCES

Drawer sides	13	Steel back panels	56	Sensomatic	73
Slides	32	Designer panels	58	Organising systems	95
Inset panels	42	Accessories	60	Assembly technology	120

DRILLING JIG SET

Drilling jig for front-bottom connector.
For drilling the bottom panel of extra-wide drawers when using the GRASS front-bottom connector.

One set includes:
- Drilling jig (1x)
- Marking jig (1x)
- Drill bits Ø 8 mm and Ø 15 mm (1 each)
- Drilling machine bit (1x)
- Allen key 3 mm (1x)
- Allen key 4 mm (1x)

	Item No.	PU
Drilling jig set	**F146094770**	299
Front-bottom connector	**F148026744**	107
Spare drill bit Ø 8 mm	**F146094755**	299
Spare drill bit Ø 15 mm	**F146094757**	299

DRILLING JIG FOR SENSOMATIC

For pre-drilling the holes for fixing brackets at the assembled cabinet or loose bottom or top panel, for the Sensomatic system.

	Item No.	PU
Drilling jig	**F146109850**	299

FRONT DRILLING JIG FOR F8 INSET PANEL

For pre-drilling the F8 inset drawer front panel

	Item No.	PU
Front drilling jig	**F146102908**	201

MARKING JIG SET

For exact marking of the drilled holes for the Nova Pro Scala installation hook.

	Item No.	PU
Nova Pro Scala H63	**F146094036**	513
Nova Pro Scala H90/H122	**F146092050**	513
Nova Pro Scala H186/ Crystal/Crystal Plus	**F146101908**	513

LEGEND

PUNCHING TOOL FOR INSTALLATION HOOKS

Position and knock in the installation hook for the Nova Pro Scala H63, H90, H122, H186, Crystal and Crystal Plus.

	Item No.	PU
Nova Pro Scala H63	**F146**094**035**	501
Nova Pro Scala H90/H122/H186 Crystal/Crystal Plus	**F146**091**555**	501

PUNCH-IN TOOL FRONT CLIP

Position and knock in the front clip for Nova Pro Scala H186, Crystal and Crystal Plus.

	Item No.	PU
Punch-in tool for front clip	**F146**102**472**	101

PUNCH-IN TOOL RAILING BRACKET

Position and knock in the railing bracket for press fitting for Nova Pro Scala.

	Item No.	PU
Punch-in tool for railing bracket	**F146**102**473**	101

PUNCH-IN TOOL FRONT-BOTTOM CONNECTOR

Position and knock in the front-bottom connector.

	Item No.	PU
Punch-in tool for front-bottom connector	**F146**083**271**	101

PAGE REFERENCES

Drawer sides	13	Steel back panels	56	Sensomatic	73
Slides	32	Designer panels	58	Organising systems	95
Inset panels	42	Accessories	60	Assembly technology	120

PILOT DRILL BIT

The pilot drill bit is used for pre-drilling holes for countersunk chipboard screws Ø 3.5 mm.

	Item No.	PU
Pilot drill bit	**F146035692**	299
Spare drill bit Ø 2.7 mm	**F146090561**	299

DRILLING JIG NOVA PRO TIPMATIC PLUS

For pre-drilling the fixing holes of locking parts:

- Easy and quick pre-drilling.
- Can be used for all lengths of the Nova Pro Scala Tipmatic Plus slides
- For use with pilot drill bit F146035692

	Item No.	PU
Drilling jig for Tipmatic Plus	**F146095530**	501

LEGEND

GRASS GmbH
Movement Systems
Grass Platz 1
6973 Höchst, Austria
Phone: +43 (0) 5578 701-0
Fax: +43 (0) 5578 701-59
E-mail: info@grass.eu

Your contact:

www.grass.eu

F147108647001 – 11|2016 – EN – **GRASS Advertising** – Subject to changes, setting and printing errors

handlie.com