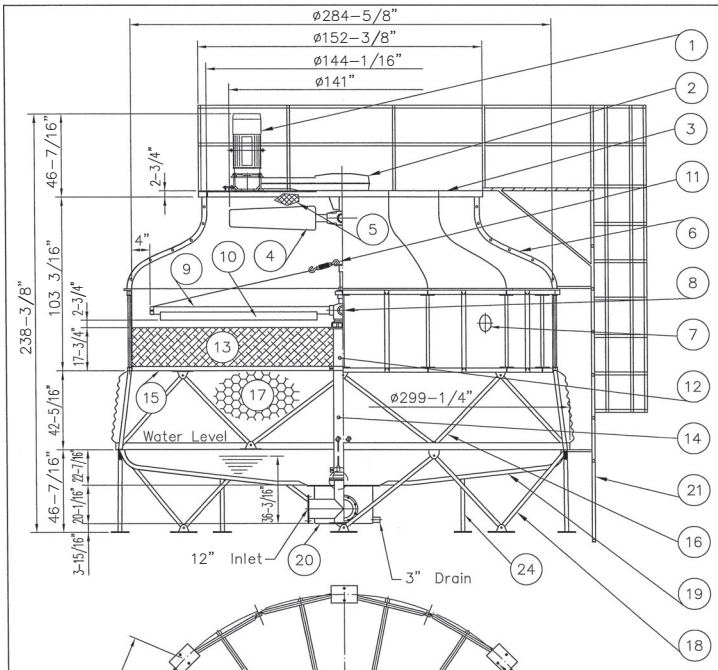

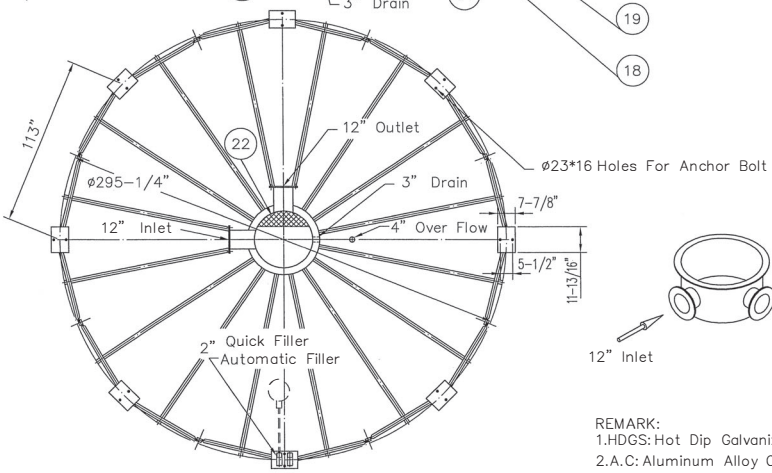

BOTTOM VIEW

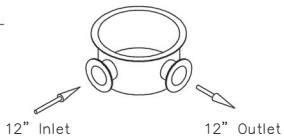

REMARK:
1.HDGS: Hot Dip Galvanized Steel .
2.A.C: Aluminum Alloy Cast .
3.ST.S: Stainless Steel.

Item	Description	M.T	Specification	Qt'y
1	Fan Motor		30HP*6P	1 pcs
2	Belt Reducer		VBA-220-B	1 set
3	Motor Frame Ass'y	HDGS		1 set
4	Fan	A.C	LSF-360	1 set
5	Fan Guard	HDGS		1 set
6	Casing	F.R.P		16 pcs
7	Hand Hole	E.V.A		1 pcs
8	Sprinkler Head	A.C	LSH-300	1 set
9	Sprinkler Pipe	P.V.C		10 pcs
10	Eliminator	F.R.P		10 pcs
11	Tension Device	HDGS		10 set
12	Stand Pipe	P.V.C		1 set
13	Filling	P.V.C		1 set
14	Stopper or Column	HDGS		1 set
15	Filling Supportor	HDGS		1 set
16	Casing Supportor	HDGS		8 pcs
17	Inlet Louver	P.V.C		1 set
18	Frame Ass'y	HDGS		1 set
19	Water Basin	F.R.P		16 pcs
20	Water Sump	F.R.P		1 pcs
21	Ladder&Safety Cage/Handrail	HDGS	OSHA	1 set
22	Strainer	ST.S		1 pcs
24	Basin Supportor	HDGS		16 pcs

Drain	80 A(3 ")	Over Flow	100 A(4 ")
Outlet	300 A(12 ")	Quick Filler	50A(2")
Inlet	300 A(12 ")	Automatic Filler	50A(2")
Pipe Connections			
Dry Weight	9,636 LBS	Operating Weight	26,356 LBS
Loading Data			
Ambient Wetbulb	80.6°F	Air Volume	175,000 Ft^3/MIN
Outlet Water Temp	89.6°F	Water Flow	2748 GPM
Inlet Water Temp	98.6°F	Cooling Capacity	12366000 BTU/HR
Design Condition			

Modified No.	Date	Modifier	Approver	NOTE
TITLE	T-2800			C.T.S
	Cooling Tower Outline Drawing			
				IN ⊬ '21·04·12
				DWG NO.
				(non plate casing type)