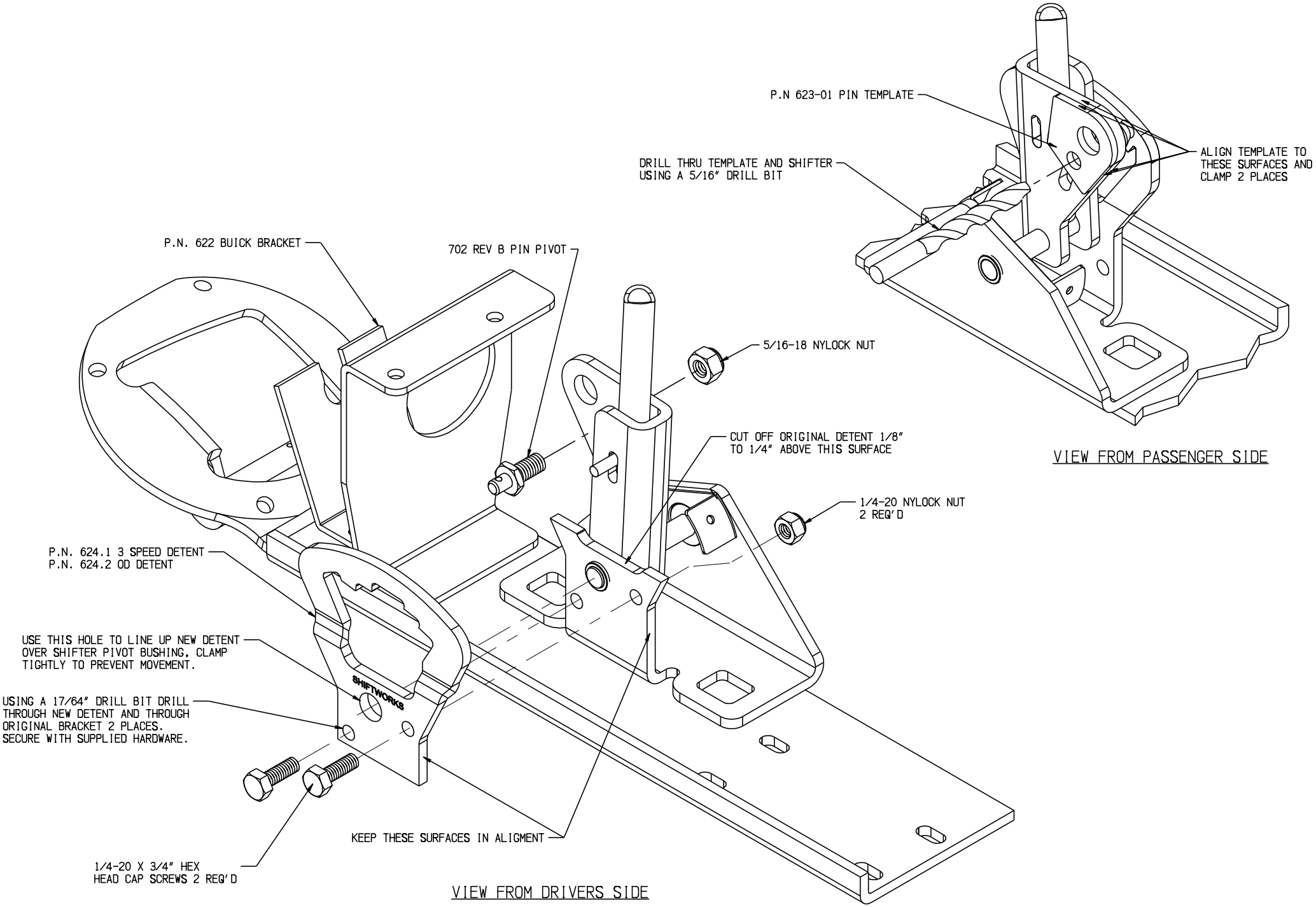

1964-65 BUICK SHIFTER CONVERSION
FROM ROD TO CABLE TYPE
revised 02-16-18