Technical Information

Honeywell

STT 3000 Series STT250
Smart Temperature Transmitters Specifications
Models STT25H, STT25S, STT25T, STT25M, STT25D
EN0I-6031 February 2012

Introduction

Honeywell's STT 3000 family of microprocessor based smart temperature transmitters include the Series STT170 designed for temperature monitoring applications, STT250 described in this specification sheet for use with control and safety applications and the higher performance STT350 described in Product Specification Sheet EN0I-5222 created for critical control applications. The STT250 units offer competitive performance in a more compact module and with a wider range of smart communications protocols.

- STT25H with HART™ protocol (Version 5 and 6*) when this popular protocol is preferred. Configuration of the HART unit can be made with any of the listed HART Communication Foundation tools.

- STT25S with HART 6 protocol and TUV SIL 2 approval. Configuration of the HART unit can be made with any of the listed HART tools.

- STT25T Dual Input model with HART™ protocol (Version 5 and 6*) and TUV* SIL 2 Approval. This model accepts two Thermocouple (TC) or two RTD Inputs. The two sensor inputs may be used for sensor cross checking or for TC sensor redundancy. User is alerted in case the sensor difference exceeds the defined limits, hence unreliable measurement is avoided. Dual* sensor inputs can also be configured for split range configuration, differential temperature measurement, averaging temperature measurement or as single sensor measurement.

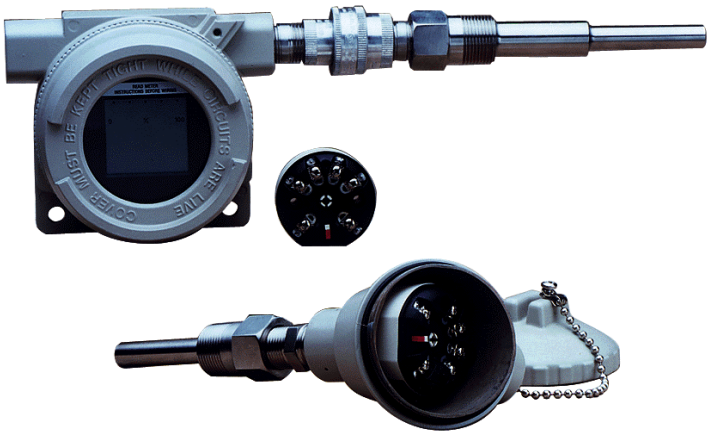

- STT25D with digital DE protocol for either 4-20mA operation or digital integration into the TDC 3000™/ TPS 3000™ control system. Configuration can be done via Honeywell's digital DE protocol from the Smart Field Communicator (SFC), Smart Configuration Toolkit PC based software (SCT) or the MC Tookit configuration tool.

- STT25M for 4-20mA operation and local/ remote configuration via Honeywell's digital DE protocol from the Smart Field Communicator (SFC), Smart Configuration Toolkit PC based software (SCT) or the MC Tookit configuration tool.

All units support the same wide range of primary sensor types, are 2 wire powered and give an output linerarized to temperature over the 2 power wires. Lead wire compensation is provided for RTD (Resistance Temperature Detectors) and internal digital cold junction compensation is provided for Thermocouples,.Millivolt and Ohms sensor inputs can also be accepted.

**Check with the factory for availability*

Features

- Smart communication protocols available include HART or DE Honeywell.
- Enhanced HART device descriptions provide better visualization of device and its diagnostics. Graphical representation (Trend, Gauge and Horizontal bar chart) of process parameters provide the operators and maintenance personnel with better readability and insight in to the process.
- Advanced diagnostics (HART devices) ensure lower maintenance costs. These include time tracking functions, tracking the primary and secondary variable limits and sensor related information.
- Direct sensor head mounting in DIN Form A housing. Housing materials available include plastic, aluminum, 316SS and cast iron.
- Mounting options include wall, pipe, DIN rail or direct sensor head mounting with or without housing.
- Single model accepts input signal from a wide choice of primary sensors to satisfy varying application requirements with minimum transmitter inventory.
- Suitable for 4, 3 or 2 wire Pt100 and Pt200 measurement for all the single input models.
- Hard wired upscale/ downscale failsafe link to ensure secure operation in the event of a failure.
- Open circuit sensor analysis carried out in every measurement cycle.
- Sensor Matching Function is available in all the STT250 Models with HART protocol. This enables the programming of Callender–vanDusen coefficients of specific RTDs into the transmitter to improve the overall measurement accuracy.
- Selectable latching/non-latching failsafe operation for open circuit sensor.
- Integral analog or digital indication meter option.
- Analog to Digital converter validated frequently

Description

The STT250 transmitters are suitable as replacements for any conventional or most smart temperature transmitters in use today. The memory contains the characteristics of most commonly used temperature sensors.

You can easily use the hand held communicator or PC tool to configure the transmitter for any of these sensors and it will automatically correct.

Accuracies stated below are available merely by selecting the sensor type and range (i.e. without user calibration).

Calibration of the LRV/URV end points will typically give accuracy improvements of 2 times. Sensor errors can be calibrated out by calibration to the specific sensor either by having it at the LRV/URV temperatures or by simulation of the known values.

In addition, all units pass through Environmental Stress Screening by fast cycling between -40°C and +85°C to ensure maximum product reliability. During this process the ambient temperature coefficients are determined for each unit and burned into memory to ensure temperature compensation over a wide range of operating conditions.

Configuration adjustments and diagnostics checks can be made either locally or remotely over the signal wires from anywhere along their route. This enables major savings in manpower time during commissioning, start up and maintenance activities.

Performance Under Rated Conditions

Sensor	*Digital Accuracy over Normal Range* ℃ (℉)	*D/A Accuracy % of span*	*Digital Accuracy over Maximum Range* ℃ (℉)	*Standards*
Pt100	0.15°C for -200 to 450°C (-328 to 842°F)	0.025%	0.25°C for -200 to 850°C (-328 to 1562°F)	IEC751(ITS-90)(α=0.00385)
Pt200	0.30°C for -200 to 450°C (-328 to 842°F)	0.025%	0.40°C for -200 to 850°C (-328 to 1562°F)	IEC751(ITS-90)(α=0.00385)
Pt100J	0.15°C for -200 to 450°C (-328 to 842°F)	0.025%	0.25°C for -200 to 640°C (-328 to 1184°F)	JISC1604-81(α=0.00392)
Ω	0.40Ω for 0 to 1000Ω	0.025%	0.40Ω for 0 to 2,000Ω	
mV	15μV for -20 to 120mV	0.025%	15μV for -20 to 120mV	
B	1.0°C for 550 to 1820°C (1022 to 3308°F)	0.025%	3.0°C for 200 to 1,820°C (392 to 3308°F)	IEC 584-1(ITS-90)
E	0.30°C for 0 to 1000°C (32 to 1832°F)	0.025%	0.60°C for -200 to 1,000°C (-328 to 1832°F)	IEC 584-1(ITS-90)
J	0.30°C for 0 to 800°C (32 to 1472°F)	0.025%	0.70°C for -200 to 1,200°C (-328 to 2192°F)	IEC 584-1(ITS-90)
K	0.60°C for -120 to 1370°C (-191 to 2498°F)	0.025%	0.90°C for -200 to 1370°C (-328 to 2498°F)	IEC 584-1(ITS-90)
N	0.40°C for 0 to 1300°C (32 to 2372°F)	0.025%	1.5°C for -200 to 1300°C (-328 to 2372°F)	IEC 584-1(ITS-90)
R	0.60°C for 500 to 1760°C (932 to 3200°F)	0.025%	1.0°C for -50 to 1760°C (-58 to 3200°F)	IEC 584-1(ITS-90)
S	0.60°C for 500 to 1760°C (932 to 3200°F)	0.025%	1.0°C for -50 to 1760°C (-58 to 3200°F)	IEC 584-1(ITS-90)
T	0.30°C for -100 to 400°C (-148 to 752°F)	0.025%	0.5°C for -250 to 400°C (-418 to 752°F)	IEC 584-1(ITS-90)

- **Note:** 4 wire RTD and 4 wire ohms inputs are not applicable for STT25T Model.

Specifications

Operation Conditions

Parameter	Reference Condition	Rated Condition	Operative Limits	Transportation And Storage
Ambient temperature °C	23 °C ± 2	-40 to +85	-40 to +85	-50 to +100
Humidity				
Rack mounted % RH	10 to 55	5 to 95	5 to 100	5 to 100
In field housing % RH	10 to 55	5 to 100	5 to 100	5 to 100
Supply voltage	Voltage range 10.8 to 35 Vdc at the transmitter terminals			
Output current - Standard	Over linear range 3.8 to 20.8 mA. Failsafe limits < 3.6 and >21.1 mA			
Output current – NAMUR NE43	Over linear range 3.8 to 20.5 mA. Failsafe limits < 3.6 and >21.1 mA			
Load resistance	0 to 1110Ω			
Vibration	Maximum of 4g over 15 to 200Hz (restricted to 3g with indication meter).			
Shock	Maximum of 40g.			

Note: All STT250 models support NAMUR NE43 Functionality except STT25D

Specifications

Performance Specifications

Output D/A accuracy: ±0.025% of span

Cold Junction accuracy: ±0.5°C

Total reference accuracy: Analogue 4-20mA mode = Digital accuracy + Output D/A accuracy + CJ accuracy (T/Cs only)

Total reference accuracy: Digital DE mode = Digital accuracy + CJ accuracy (T/Cs only).

(example: transmitter operating in analogue mode with Pt100 sensor and 0 to 200°C range.

Total reference accuracy = 0.15+ (200/100)* 0.025 = 0.2°C.

Digital ambient temperature effect (per 10°C change from 23°C ref.)
: RTDs or Ohms : 0.050% of reading in Ohms.
: T/Cs or mV : 0.080% of reading in mV.

Output D/A ambient temp. effect (per 10°C change from 23°C ref.): ±0.045% of span.

Cold Junction ambient temperature effect: 40: 1 rejection for ambient temperature changes from 23°C reference.

Total Reference Accuracy (Reference – Includes combined effects of linearity, hysteresis, and repeatability)

Total output ambient temperature effect : Analogue 4-20mA mode = Digital effect + Output D/A effect + CJ effect (T/Cs only).

Total output ambient temperature effect: Digital DE mA mode = Digital effect + CJ effect (T/Cs only).

Power supply voltage effect: 0.005% of Max span per Volt.

Stability/time drift: 0.05% of max span per year.

Additional Parameters

Output:
4-20mA or Honeywell digital DE protocol. HART and DE available with 4-20mA output.

Adjustment range:
No limits to adjustments within the Maximum Range except minimum span limit of 1 engineering unit e.g. 1°C

Damping time constant:
Adjustable from 0 to 102 seconds digital damping.

Output response time:
1 second to reach 63% of final value with 0 secs damping.

Output update time:
0.5 secs approximately.

Input/ output galvanic isolation
Withstands 500Vac dielectric strength test for 1 minute.

Sensor open circuit:
Open circuit/ burnout detection is user selectable. Upscale or downscale with critical status message. Latching or non-latching sensor burnout action.

Common mode rejection:
120dB (1 million to 1) from 50Hz to 50 kHz.

Series mode rejection:
40dB (100 to 1) for 50 or 60Hz ±0.5Hz. (with internal software filter set to local power line frequency).

EMC compliance:
In compliance with 2004/108/EC, Electromagnetic Compatibility (EMC) Directive.

Radiated RF Immunity:
0.1% of span at (10V/m) over 80 to 1,000MHz. 3V/m over 1.4GHz to 2 GHz. 1V/m over 2GHz to 2.7GHz.

Physical Mounting and Construction

The STT250 Temperature Transmitter is designed to be mounted in a DIN Form A housing for direct installation with the temperature sensor or can be provided in a remote pipe or wall mount housing. Details for the various housings available are referenced in the table below. The STT250 Temperature Transmitter module can also be DIN rail mounted to a top hat or “G” rail via a clip. Integral meters available

Integral Meters

Honeywell’s Series STT250 Temperature Transmitters can be supplied with local or remote indication. An Analog, Engineering Units or a Smart meter can be mounted integral to the transmitter inside the field mount housing. Order an integral meter as part of the model number; Table II _ _ M, _ _ E and _ _ S, respectively. Order a remote meter as model RMA300. The analogue meter is a 4-20mA moving coil type and displays the temperature in 0 to 100% span.

The E. U. meter displays temperature in engineering units with the STT25H, STT25T and STT25S HART units. Refer to 34-ST-25-08D for more details. The Smart meter accepts 4-20mA or DE protocol and displays temperature on a LCD in engineering units or 0 to 100% span.

The remote digital meter reads DE protocol and displays temperature on a LCD in 0 to 100% span. Refer to 34-ST-25-07A for details.

STT250 Module Dimensions (in/mm)

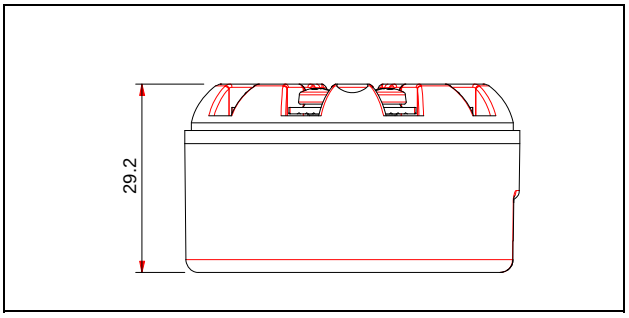

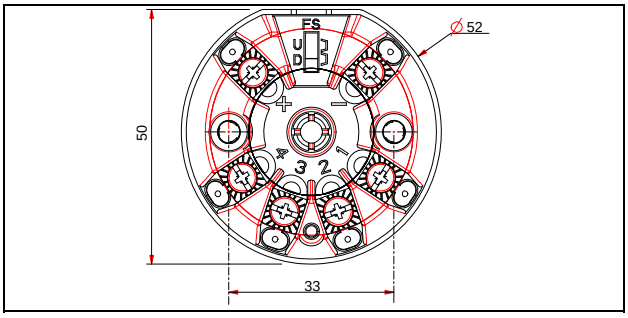

STT250 Single Input Connections

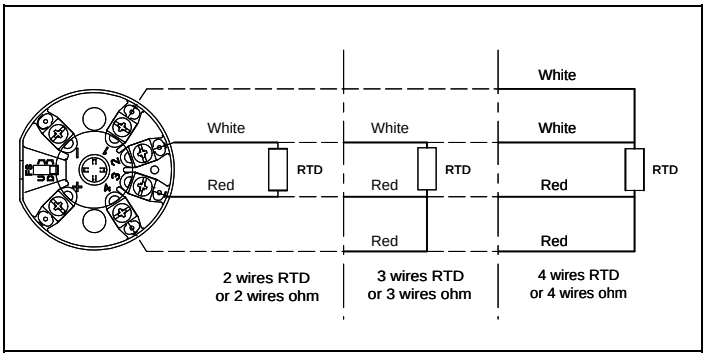

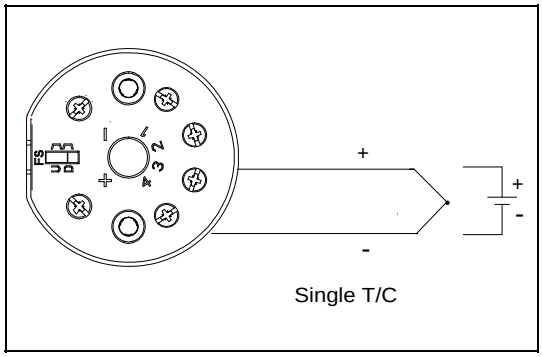

STT250 Dual Input Connections

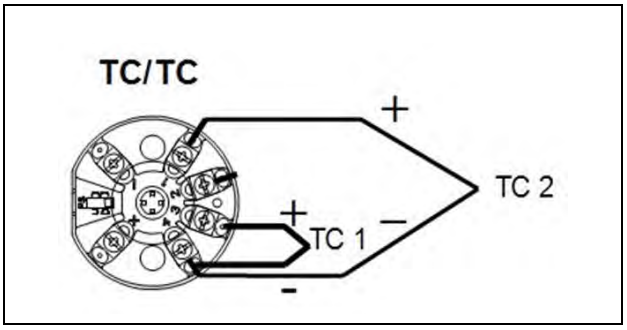

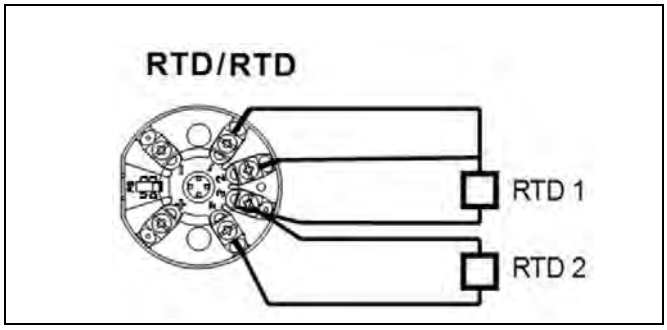

Materials of Construction

Terminal Block	Noryl
Connection Screws	M3 Nickel plated brass
Module Housing	Cycoloy (PC/ABS) with metallized interior surface
Weight	0.075 kg (0.2 lbs)

Approvals

The STT250 Temperature Transmitter module is Intrinsically Safe to ATEX, IECEx , SAEx, FM and CSA standards when used with a suitable safety barrier. It is zone 2 and explosion-proof to ATEX, IECEx, SAEx, FM and CSA standards when installed in a suitable housing. See the Model Selection Guide Table VII in this Specification Sheet for detailed safety approvals covering both the STT250 module only or for the STT250 module supplied in a housing.

Other Honeywell STT 3000 Temerature Solutions

STT170 Series	34-TT-03-07, STT 3000 Smart Temperature Transmitter Specification
STT350 Series	EN0I-5222, STT 3000 Smart Temperature Transmitter Specification
STT800 Series	34-TT-03-08, STT 3000 Temperature Probe Assemblies Specification

Sales and Service

For application assistance, current specifications, pricing, or name of the nearest Authorized Distributor, contact one of the offices below.

ASIA PACIFIC

(TAC)
hfs-tac-support@honeywell.com

Australia
Honeywell Limited
Phone: +(61) 7-3846 1255
FAX: +(61) 7-3840 6481
Toll Free 1300-36-39-36
Toll Free Fax:
1300-36-04-70

China – PRC - Shanghai
Honeywell China Inc.
Phone: (86-21) 5257-4568
Fax: (86-21) 6237-2826

Singapore
Honeywell Pte Ltd.
Phone: +(65) 6580 3278
Fax: +(65) 6445-3033

South Korea
Honeywell Korea Co Ltd
Phone: +(822) 799 6114
Fax: +(822) 792 9015

EMEA

Honeywell Process Solutions,
Phone: + 80012026455 or +44 (0)1202645583
FAX: +44 (0) 1344 655554
Email: (Sales)
sc-cp-apps-salespa62@honeywell.com
or
(TAC)
hfs-tac-support@honeywell.com

NORTH AMERICA

Honeywell Process Solutions,
Phone: 1-800-423-9883
Or 1-800-343-0228

Email: (Sales)
ask-ssc@honeywell.com
or
(TAC)
hfs-tac-support@honeywell.com

SOUTH AMERICA

Honeywell do Brasil & Cia
Phone: +(55-11) 7266-1900
FAX: +(55-11) 7266-1905

Email: (Sales)
ask-ssc@honeywell.com
or
(TAC)
hfs-tac-support@honeywell.com

Specifications are subject to change without notice.

Model Selection Guides are subject to change and are inserted into the specifications as guidance only.
Prior to specifying or ordering a model check for the latest revision Model Selection Guides which are published with the corresponding product at: www.honeywellprocess.com

Model Selection Guide

STT 3000 Temperature Transmitter Series STT250

Model Selection Guide

Instructions

- Choose availability column based on mounting configuration.
- A dot (•) denotes unrestricted availability. A letter denotes restricted availability.
- Blank denotes unavailable - choose alternate mounting. Restrictions follow Table VII.
- Select the desired Key Number based on the desired communications protocol.
- Select options and approvals from Tables.

Key Number	I	II	III	IV	V	VI	VII
STT25_	_	_ _ _	_ _ _	_ _ _	_ _ _	_ _	_ _

HOW WILL THE UNIT BE MOUNTED?

Module only (no housing), to be DIN rail or wall mounted
Module to be "head mounted" directly to the sensor in smaller housing
Module to be "field mounted" in Explosion-Proof housing remotely from or directly to the sensor

Key Number

Description	Selection	Availability		
Smart Temperature Transmitter Module				
4-20mA Output, SFC/SCT Configurable	STT25M	•	•	•
HART 5, Protocol, 4-20mA Output	STT25H	•	•	•
HART 6, Protocol, 4-20mA Output	STT25S	•	•	•
Digital DE/ 4-20mA Output, for Digital Integration	STT25D	•	•	•
Dual input, HART Protocol, 4-20mA output	STT25T	•	•	•
All modules carry the following approvals: CE Mark for compliance to EN 50081-2 and 50082-2; Russian Certificate of Pattern Approval No. 2064 of Jan. 1998; Choose additional safety approvals required in Table VII				

TABLE I - Sensor, Probe and Thermowell Accessories

No Integral Sensor Probe or Thermowell Supplied	0	•	•	•

TABLE II - Transmitter Housing and Integral Meters (Reference EN0I-6032 for details)

Housing	No Housing Supplied		0 _ _			•
	Field Mount(2)	Explosion-Proof Aluminum with Beige Epoxy Coating	E _ _	•		
		Explosion-Proof 316 Stainless Steel	T _ _	•		
	Head Mt	Type 4X housing - Beige	C _ _		•	
Cable/ Conduit Entry	Not Applicable - No Housing Supplied		_ 0 _			•
	1/2" NPT Cable/ Conduit Entry		_ N _	•	•	
	M20 x 1.5 Cable/ Conduit Entry		_ M _		•	
Integral Meter	No Integral Meter Supplied		_ _ 0	•	•	•
	Analog Meter for Field Mount Housing		_ _ M	•		
	E.U. Meter for Field Mount Housing		_ _ E	h		
	Smart Meter for Field Mount Housing (3)		_ _ S	i		

(2) With a Field Mount Housing, 20 characters max. of customer information is available on the nameplate at no charge. (See 13:STT-OE pages for ordering instructions.)

(3) For the STT25D and STT25M transmitters

34-44-16U-03
Issue 37
Page 2 of 5

HOW WILL THE UNIT BE MOUNTED? **Availability**

Module only (no housing), to be DIN rail or wall mounted
Module to be "head mounted" directly to the sensor in smaller housing
Module to be "field mounted" in Explosion-Proof housing remotely from or directly to the sensor

TABLE III - Configuration, Tagging and Manual

		Selection			
Configuration	None - Factory Default Configuration Supplied	0 _ _	•	•	•
	Transmitter Configuration (See 13:STT-OE pages for choice	T _ _	•	•	•
Customer Tagging (4)	No Tagging Required	_ 0 _	•	•	•
	316 SS Wired-on Customer I.D. Tag (4 lines, 28 chars. per line, customer specified information)	_ T _	•	•	
	316 SS Wired-on Customer I.D. Tag (blank)	_ B _	•	•	
Operator's Manual (5)	None	_ _ 0	•	•	•
	English Language Version	_ _ E	•	•	•
	French Language Version	_ _ F	•	•	•
	Spanish Language Version	_ _ S	b	b	b
	Chinese Language Version	_ _ C	b	b	b

TABLE IV - Optional Equipment

Mounting Arrangement	No Mounting Arrangment Supplied		0 _ _	•	•	•
	Carbon Steel Mounting Bracket for 2" Pipe		M _ _	•		
	Stainless Steel Mounting Bracket for 2" Pipe		S _ _	•		
	Spring Loading Mounting set		L _ _		•	•
	DIN Rail Mounting via Clip (to Top Hat or "G" Rail)		D _ _			•
316 SS Conduit Adaptor for Wiring Entry	No Adaptor(s) Supplied		_ 0 _	•	•	•
	1/2" NPT to M20 x 1.5 (EEx d IIC approved)	1 Adaptor	_ 1 _	•	•	
		2 Adaptors	_ 2 _	•	•	
	1/2" NPT to 3/4" NPT	1 Adaptor	_ 3 _	•		
Lightning Protection	No Lightning Protection Supplied		_ _ 0	•	•	•
	Externally Mountable to Field Mount Housing		_ _ L	e		
	Internal Surge/ Lightning Protection		_ _ S	•		

TABLE V - Optional Extended Warranty Coverage & Certificates

Optional Extended Warranty	Standard Warranty	0 _ _	•	•	•
	Additional Warranty - 1 year	1 _ _	•	•	•
	Additional Warranty - 2 years	2 _ _	•	•	•
	Additional Warranty - 3 years	3 _ _	•	•	•
Optional Certificate (5)	No Transmitter Configuration/ Calibration Certificate	_ 0 _	•	•	•
	Transmitter Configuration/ Calibration Certificate	_ D _	•	•	•
	FMEDA (SIL) + Config./ Calibration Certificate	_ S _	g	g	g
	No Certificate of Conformance/ Origin	_ _ 0	•	•	•
	Certificate of Conformance/ Origin	_ _ C	•	•	•
	FMEDA (SIL) + Conformance/ Origin Certificate	_ _ S	g	g	g

TABLE VI - Additional Features

SIL2	No SIL2 - TUV Certified Transmitter	00	•	•	•
	SIL2 - TUV Certified Transmitter (requires HART 6)	S2	d	d	d

(4) Full model number does not appear on module or head mount housing.
If model number is to appear on unit, order wired on tag.

(5) Chosen Operator's Manuals and chosen Certificates are automatically shipped with unit.
See 13:STT-OE pages for additional manuals and alternate shipping.

HOW WILL THE UNIT BE MOUNTED?

Module only (no housing), to be DIN rail or wall mounted
Module to be "head mounted" directly to the sensor in smaller housing
Module to be "field mounted" in Explosion-Proof housing remotely from or directly to the sensor

TABLE VII - Safety Approvals (6)

Approval Body	Approval Type	Location or Classification	Selection	Availability		
None	No approval body certifications included		00	•	•	•
Factory Mutual	Explosion-Proof	Class I, Div. 1, Groups A,B,C,D	1C	•		
	Dust Ignition-Proof	Class II, III Div. 1, Groups E,F,G				
	Intrinsically Safe	Class I, II, III, Div. 1, Groups A,B,C,D,E,F,G				
	Non-Incendive	Class I, Div. 2, Groups A,B,C,D Suitable for Class II, III, Div. 2, Groups F, G				
	Outdoor Location	Enclosure Rated NEMA 4X				
	Explosion-Proof	Class I, Div. 1, Groups B,C,D	1J	•		
	Dust Ignition-Proof	Class II, III, Div. 1 Groups E,F,G				
	Intrinsically Safe	Class I, II, III, Div. 1, Groups A,B,C,D,E,F,G				
	Non-Incendive	Class I, Div. 2, Groups A,B,C,D Suitable for Class II, III, Div. 2, Groups F, G				
	Outdoor Location	Enclosure Rated NEMA 4X				
	Intrinsically Safe	Class I, II, III, Div. 1, Groups A,B,C,D,E,F,G	1G	•		
	Non-Incendive	Class I, Div. 2, Groups A,B,C,D Suitable for Class II, III, Div. 2, Groups F, G				
	Outdoor Location	Enclosure Rated NEMA 4X				
	Intrinsically Safe	Class I, Div. 1, Groups A,B,C,D	1G		•	•
	Non-Incendive	Class I, Div. 2, Groups A,B,C,D				
CSA	Explosion-Proof	Class I, Div. 1, Groups B,C,D	2J	•		
	Dust Ignition-Proof	Class II, III, Div. 1, Groups E,F,G				
	Intrinsically Safe	Class I, II, III, Div. 1, Groups A,B,C,D,E,F,G				
	Non-Incendive	Class I, Div. 2, Groups A,B,C,D Suitable for Class II, III, Div. 2, Groups F, G				
	Outdoor Location	Enclosure Rated Type 4X				
	Intrinsically Safe	Class I, II, III, Div. 1, Groups A,B,C,D,E,F,G	2G	•		
	Non-Incendive	Class I, Div. 2, Groups A,B,C,D Suitable for Class II, III, Div. 2, Groups F, G				
	Outdoor Location	Enclosure Rated Type 4X				
	Intrinsically Safe	Class I, Div. 1, Groups A,B,C,D	2G		•	•
	Non-Incendive	Class I, Div. 2, Groups A,B,C,D				

34-44-16U-03
Issue 37
Page 4 of 5

TABLE VII - Safety Approvals (6) Continued

Approval Body	Approval Type	Location or Classification	Selection			
ATEX*	Intrinsically Safe Zone 0/1	Ⓔx II 1 G Ex ia IIC T6 (Ta = -50°C to +40°C) T5 (Ta = -50°C to +55°C) T4 (Ta = -50°C to +85°C) (Module)	3S	•	•	•
	Flameproof, Zone 1	Ⓔx II 2 GD Ex d IIC T6 (Ta = -50°C to +80°C) T5 (Ta = -50°C to +85°C) Ex tD A21 T80°C (Ta = 80°C) T95°C (Ta = 85°C) Enclosure rated IP 66/67	3D	p		
	Non-Sparking Zone 2	Ⓔx II 3 G Ex nA, IIC T6*	3N	•	•	•
	Multiple Marking** Int. Safe, Zone 0/1, or Flameproof, Zone 1, or Non-Sparking, Zone 2	Ⓔx II 1 G Ex ia IIC T6 (Ta = -50°C to +40°C) T5 (Ta = -50°C to +55°C) T4 (Ta = -50°C to +85°C) Ⓔx II 2 GD Ex d IIC T6 (Ta = -50°C to +80°C) T5 (Ta = -50°C to +85°C) Ex tD A21 T80°C (Ta = 80°C) T95°C (Ta = 85°C) Ⓔx II 3 G Ex nA, IIC T6 (Ta = -50°C to +85°C) (Honeywell) Enclosure Rated IP 66/67	3H	p		
SAEx (South Africa)	Intrinsically Safe Zone 0/1	SAEx S/08-371X Ⓔx II 1 G Ex ia IIC T6 (Ta = -50°C to +40°C) T5 (Ta = -50°C to +55°C) T4 (Ta = -50°C to +85°C)	Z2	•	•	•
	Flameproof, Zone 1	SAEx S/08-372X Ⓔx II 2 GD Ex d IIC T6 (Ta = -50°C to +80°C) T5 (Ta = -50°C to +85°C) Ex tD A21 T80°C (Ta = 80°C) T95°C (Ta = 85°C) Enclosure rated IP 66/67	ZD	•	•	•
	Intrinsically Safe Zone 0/1 and Flameproof, Zone 1	SAEx S/08-371X Ⓔx II 1 G Ex ia IIC T6 (Ta = -50°C to +40°C) T5 (Ta = -50°C to +55°C) T4 (Ta = -50°C to +85°C) SAEx S/08-372X Ⓔx II 2 GD Ex d IIC T6 (Ta = -50°C to +80°C) T5 (Ta = -50°C to +85°C) Ex tD A21 T80°C (Ta = 80°C) T95°C (Ta = 85°C) Enclosure rated IP 66/67	ZA	•	•	•
IECEx	Flameproof, Zone 1 (with IS transmitter)	Ex d IIC; T6 (Ta = –50 to +80°C) T5 (Ta = –50 to +85°C) Ex tD A21 IP6X T80°C (Ta = –50 to +80°C Ex tD A21 IP6X T95°C (Ta = –50 to +85°C	CB	•	•	•
	Intrinsically Safe Zone 0/1	Ex ia IIC; T6 (Ta = –50 to +40°C) T5 (Ta = –50 to +55°C) T4 (Ta = –50 to +85°C)	CS	•	•	•
INMETRO (Brazil)	Flameproof, Zone 1	BR Ex d IIC T6, T5, T4 Enclosure rated IP 66/67	6D	p		
	Intrinsically Safe, Zone 0/1	BR Ex ia IIC T6, T5, T4 (Module)	6S	b	b	b

(6) The module itself is rated intrinsically safe, IP20. An appropriately rated enclosure is required for Outdoor and Dust locations.

* Module must be installed in IP54 or better housig for Zone 2 approval validity.

** The user must determine the type of protection required for installation of the equipment. The user shall then check the box (☑) adjacent to the type of protection used on the equipment certification label. Once a type of protection has been checked on the label, the equipment shall not be reinstalled using any of the other certification type.

RESTRICTIONS

Restriction Letter	Available Only With		Not Available With	
	Table	Selection	Table	Selection
b			Key No.	STT25T
d	Key No.	STT25S		
e			VII	3D
f	II	EN0, TN0,		
g	Key No.	STT25H, STT25M		See Note 6
h	Key No.	STT25H, STT25T, STT25M,STT25S		
i	Key No.	STT25M, STT25D		
p	II	E _ _, T _ _		

Notes: (6) The module itself is rated intrinsically safe, IP20. An appropriately rated enclosure is required for Outdoor and Dust locations.
See 13:STT-9 or Operator's Manual EN1I-6190 for part numbers.
See 13:STT-OE pages for Order Entry Information including tagging, transmitter configuration, manuals, certificates, drawings and SPINS.
To request a quotation for a non-published "special", fax RFQ to Marketing Applications at (1) 602 313-6155.

Ordering Example: STT25M-0-000-000-000-000-00-1C

For More Information

Learn more about how Honeywell's STT 3000 Smart Temperature Transmitters can increase performance, reduce downtime and decrease configuration costs, visit our website https://www.honeywellprocess.com or contact your Honeywell account manager.

Honeywell Process Solutions
1860 West Rose Garden Lane
Phoenix, AZ 85027
Tel: 1-800-423-9883 or 1-800-343-0228
www.honeywellprocess.com

EN0I-6031
February 2012