TRIANGLE FLANGETTE UNITS
SBPFT 200 Series
Light Duty
Set Screw Locking

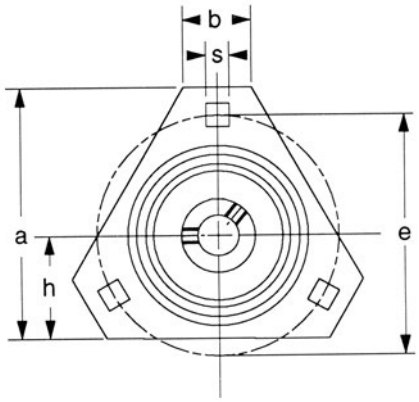

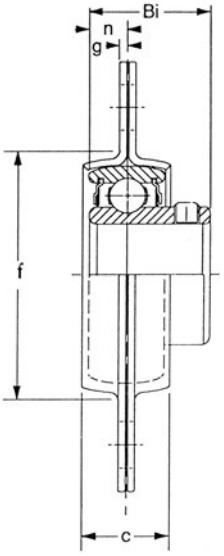

Unit No.	Shaft Dia. In.	Shaft Dia. mm	Dimensions inch / mm a	e	h	s	c	g	b	f	Bi	n	Bolt Size	Bearing No.	Housing No.	Weight Lbs Kg
SBPFT 201-8	1/2		2-23/32	2-33/64	1-3/16	9/32	9/16	0.075	13/16	1-59/64	0.866	0.236	1/4	SB 201-8	PFT203	0.57
202-10	5/8		69	64	29	7	14	1.9	21	49	22	6.0	M6	202-10		0.26
SBPFT 204		20	2-63/64	2-51/64	1-19/64	11/32	5/8	0.083	1-1/16	2-7/32	0.984	0.276	5/16	SB 204	PFT204	0.59
204-12	3/4		76	71	33	9	16	2.1	27	56	25	7.0	M8	204-12		0.27
SBPFT 205		25												SB 205		
205-14	7/8		3-1/8	2-63/64	1-3/8	11/32	21/32	0.083	1-3/32	2-19/32	1.063	0.295	5/16	205-14	PFT205	0.66
205-15	15/16		79	76	35	9	17	2.1	28	66	27	7.5	M8	205-15		0.3
205-16	1													205-16		
SBPFT 206		30												SB 206		
206-17	1-1/16													206-17		
206-18	1-1/8		3-11/16	3-35/64	1-1/2	13/32	21/32	0.102	31/32	2-51/64	1.181	0.315	3/8	206-18	PFT206	0.88
206-19	1-3/16		94	90	38	10	17	2.6	25	71	30	8	M10	206-19		0.4
206-20	1-1/4S													206-20		
SBPFT 207		35												SB 207		
207-20	1-1/4													207-20		
207-21	1-5/16		4-11/64	3-15/16	1-3/4	13/32	3/4	0.102	1-1/4	3-3/16	1.260	0.335	3/8	207-21	PFT207	1.54
207-22	1-3/8		106	100	44	10	19	2.6	32	81	32	8.5	M10	207-22		0.7
207-23	1-7/16													207-23		