PILLOW BLOCKS

SAP LIGHT DUTY ECCENTRIC LOCKING COLLAR TYPE

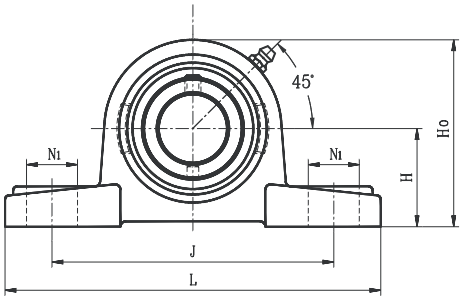

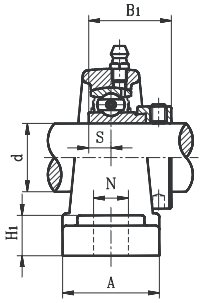

- Cast iron housing - solid base.
- Narrow inner ring bearing

Unit No.	Shaft Dia. d (in.)	Shaft Dia. d (mm)	Dimension (in) (mm) H	L	J	A	N	N_1	H_1	H_0	S	B_1	Bolt Size (in)	Bearing No.	Housing No.	Weight (lb)
SAP201G		12												SA201G		
201-8G	1/2													201-8G		
202G		15	1-3/16	4-15/16	3-5/8	1-1/4	15/32	5/8	1/2	2-1/4	1/4	1-1/8	3/8	202G	P203S	1.43
202-10G	5/8		30.2	125	92	32	12	16	13	57.0	6.5	28.6		202-10G		
203G		17												203G		
203-11G	11/16													203-11G		
SAP204-12G	3/4		1-5/16	5	3-25/32	1-15/32	1/2	5/8	9/16	2-1/2	9/32	1-7/32	3.8	SA204-12G	P204	1.43
204G		20	33.3	127	96	37	13	16	14	63.8	7.5	30.9		204G		
SAP205-14G	7/8													SA205-14G		
205-15G	15/16		1-7/16	5-1/2	4-1/8	1-1/2	1/2	3/4	19/32	2-3/4	9/32	1-7/32	3/8	205-15G	P205	1.87
205G		25	36.5	140	105	38	13	19	15	69.5	7.5	30.9		205G		
205-16G	1													205-16G		
SAP206-18G	1-1/8													SA206-18G		
206G		30	1-11/16	6-5/16	4-25/32	1-23/32	9/16	3/4	5/8	3-7/32	11/32	1-13/32	1/2	206G	P206	3.08
206-19G	1-3/16		42.9	160	121	44	14	19	16	82.0	9.0	35.7		206-19G		
206-20G	1-1/4													206-20G		
SAP207-20G	1-1/4													SA207-20G		
207-21G	1-5/16													207-21G		
207-22G	1-3/8		1-7/8	6-9/16	4-31/32	1-7/8	19/32	3/4	11/16	3-5/8	3/8	1-17/32	1/2	207-22G	P207	3.70
207G		35	47.6	167	126	48	15	19	17	92.0	9.5	38.9		207G		
207-23G	1-7/16													207-23G		
SAP208-24G	1-1/2													SA208-24G		
208-25G	1-9/16		1-15/16	7-3/32	5-11/32	2-1/16	19/32	13/16	23/32	7/8	7/16	23/32	1/2	208-25G	P208	4.66
208G		40	49.2	180	136	52	15	21	18	98.0	11.0	43.7		208G		
SAP209-26G	1-5/8													SA209-26G		
209-27G	1-11/16		2-1/8	7-7/16	5-3/4	2-1/8	19/32	53/64	25/32	4-5/32	7/16	1-23/32	1/2	209-27G	P209	5.26
209-28G	1-3/4		54.0	189	146	54	15	21	20	105.5	11.0	43.7		209-28G		
209G		45												209G		
SAP210-30G	1-7/8		2-1/4	8-1/32	6-1/4	2-1/4	3/4	7/8	13/16	4-13/32	7/16	23/32	5/8	SA210-30G	P210	5.70
210-31G	1-15/16		57.2	204	159	57	19	22	21	112.2	11.0	43.7		210-31G		
210G		50												210G		
SAP211-32G	2													SA211-32G		
211-34G	2-1/8		2-1/2	8-17/32	6-25/32	2-3/8	3/4	7/8	7/8	4-29/32	15/32	1-29/32	5/8	211-34G	P211	7.39
211G		55	63.5	217	172	60	19	22	22	124.5	12.0	48.4		211G		
211-35G	2-3/16													211-35G		
SAP212-36G	2-1/4													SA212-36G		
212G		60	2-3/4	9-3/8	7-5/16	2-19/32	3/4	31/32	15/16	5-13/32	15/32	1-15/16	5/8	212G	P212	11.35
212-38G	2-3/8		69.9	238	186	66	19	25	24	137.0	12.0	49.3		212-38G		
212-39G	2-7/16													212-39G		