SAPL Pillow Blocks

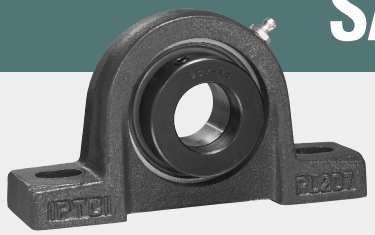

Low shaft height with eccentric locking collar.

- Cast iron housing
- K-type seals
- Narrow inner race bearing

K-type Seal

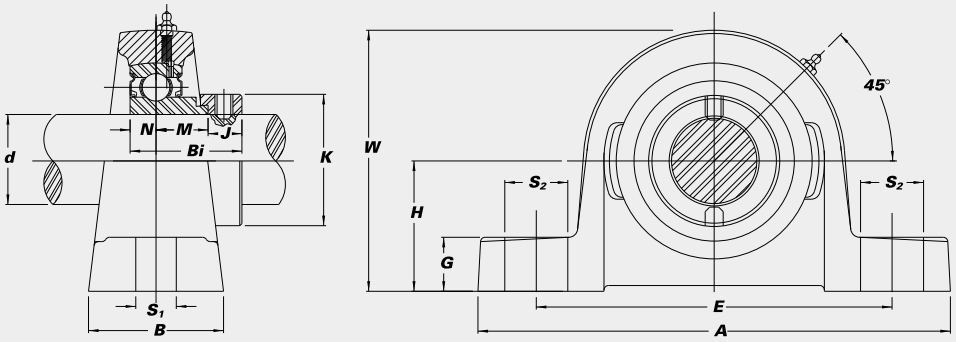

Unit No.	Shaft Dia. d (in.)	Shaft Dia. d (mm)	H	A	E	B	S_2	S_1	G	W	Bi	N	M	J	K	Bolt Used (in.)	Bearing No.	Housing No.	Weight (lbs.)
			Dimensions (in.) (mm)																
SAPL 201		12															SA 201G		
201-8	1/2																201-8G		
202		15	1 1/16	4 7/8	3 5/8	1 7/16	3/4	7/16	17/32	2 15/64	1.1260	0.2559	0.4960	0.3740	1.1260	3/8	202G	PL 203	1.5
202-10	5/8		27	124	92	37	19	11	13	57	28.6	6.5	12.6	9.5	28.6		202-10G		
203		17															203G		
SAPL 204-12	3/4		1 1/4	5	3 3/4	1 1/2	9/16	7/16	9/16	2 1/2	1.2205	0.2953	0.5512	0.3740	1.3110	3/8	SA 204-12G	PL 204	1.7
204		20	31.8	127	95	38	14	11	14	64	31.0	7.5	14.0	9.5	33.3		204G		
SAPL 205-14	7/8																SA 205-14G		
205-15	15/16		1 5/16	5 1/2	4 1/8	1 1/2	11/16	7/16	5/8	2 45/64	1.2205	0.2953	0.5513	0.3740	1.5000	3/8	205-15G	PL 205	2.0
205		25	33.3	140	105	38	18	11	16	69	31.0	7.5	14.0	9.5	38.1		205G		
205-16	1																205-16G		
SAPL 206-17	1 1/16																SA 206-17G		
206-18	1 1/8																206-18G		
206		30	1 9/16	6 11/32	4 3/4	1 3/4	13/16	9/16	11/16	3 5/32	1.4055	0.3543	0.5827	0.4685	1.7520	1/2	206G	PL 206	3.0
206-19	1 3/16		39.7	161	121	45	21	14	18	80	35.7	9.0	14.8	11.9	44.5		206-19G		
206-20	1 1/4S																206-20G		
SAPL 207-20	1 1/4																SA 207-20G		
207-21	1 5/16																207-21G		
207-22	1 3/8		1 13/16	6 19/32	5	1 7/8	7/8	9/16	25/32	3 21/32	1.5315	0.3740	0.6260	0.5315	2.1890	1/2	207-22G	PL 207	4.0
207		35	46.0	167	127	48	22	14	20	93	38.9	9.5	15.9	13.5	55.6		207G		
207-23	1 7/16																207-23G		
SAPL 208-24	1 1/2																SA 208-24G		
208-25	1 9/16		1 15/16	7 1/8	5 7/16	2	7/8	9/16	13/16	4	1.7205	0.4331	0.7559	0.5315	2.3740	1/2	208-25G	P 208	5.0
208		40	49.2	181	137	51	22	14	21	102	43.7	11.0	19.2	13.5	60.3		208G		
SAPL 209-26	1 5/8																SA 209-26G		
209-27	1 11/16		2 1/16	7 1/2	5 3/4	2 1/8	13/16	9/16	29/32	4 7/32	1.7205	0.4331	0.7559	0.5315	2.5000	1/2	209-27G	PL 209	6.1
209-28	1 3/4		52.4	191	146	54	20	14	23	107	43.7	11.0	19.2	13.5	63.5		209-28G		
209		45															209G		
SAPL 210-30	1 7/8																SA 210-30G		
210-31	1 15/16		2 3/16	8 1/32	6 1/4	2 1/4	15/16	11/16	29/32	4 29/64	1.7205	0.4331	0.7559	0.5315	2.7520	5/8	210-31G	PL 210	6.7
210		50	55.6	204	159	57	24	18	23	113	43.7	11.0	19.2	13.5	69.9		210G		
210-32	2S																210-32G		
SAPL 211-32	2																SA 211-32G		
211-34	2 1/8		2 7/16	8 5/8	7	2 3/8	15/16	11/16	1	4 61/64	1.9055	0.4724	0.8031	0.6299	3.0000	5/8	211-34G	PL 211	8.8
211		55	61.9	219	178	60	24	18	25.4	126	48.4	12.0	20.4	16.0	76.2		211G		
211-35	2 3/16																211-35G		

Interchange Page 47

IPTCI BEARINGS